White Paper **WP040009EN** Effective July 2021

Harmonic solutions explained



Powering Business Worldwide

Authors

Daniel J. Carnovale, P.E.
Director, Eaton Experience Centers



Erik Hurd
Power Systems Experience Center Engineer



Santino Graziani
Power Systems Experience Center Engineer



Table of contents

Introduction . . . 3
Harmonic sources . . . 4
Harmonic symptoms . . . 4
IEEE STD 519-2014 . . . 5
  Sample specifications in excess of the IEEE recommendations . . . 5
  Voltage or current harmonics? . . . 6
  PCC . . . 6
Harmonic solutions . . . 7
  Individual load harmonic solutions . . . 7
  Low distortion loads . . . 7
  System solutions for harmonic correction . . . 7
  Power factor solutions that address harmonics . . . 7
Individual load solutions . . . 8
  Line reactors . . . 8
  DC choke . . . 9
  Isolation transformers . . . 10
  Drive dedicated filters (broadband filters) . . . 12
  12-pulse converters . . . 12
  18-pulse drives—differential delta . . . 13
  24-pulse medium-voltage converters . . . 14
  AFE drives . . . 14
  AFE uninterruptible power supplies (UPS) . . . 15
System harmonic solutions . . . 16
  Tuned harmonic filters . . . 16
  Harmonic mitigating transformers and multi-pulse distribution . . . 18
  Active filters . . . 20
  Neutral blocking filters . . . 21
  Overdesigned and oversized equipment (transformers, generators, conductors) . . . 21
Power factor solutions that address harmonics . . . 24
  Avoiding harmonic resonance . . . 25
  Low-voltage versus medium-voltage solutions . . . 25
How can reducing harmonics save you money? . . . 26
Single load versus systems approach for harmonic solutions . . . 28
Summary . . . 28
References . . . 31

Abstract

Problems associated with harmonic distortion are well understood for many power system applications. However, finding the right solution is challenging. There are at least ten different technologies and strategies to choose from, each with specific technical and economic advantages. This paper provides technical recommendations for reducing harmonic distortion, improving system capacity and improving system reliability while evaluating installed costs. Special considerations for applying capacitors on a power system with harmonics are discussed. Optional solutions for variable frequency drive applications such as applying a single large harmonic filter or active filter, versus drive dedicated filters, versus phase-shifting transformers are evaluated. Finally, opportunities for improving energy efficiency using harmonic technologies are explained.

Introduction

This paper assumes that the reader has some basic knowledge of power system harmonics. As a simple refresher—the general acceptable explanation is that harmonic currents flow or are "sourced" from loads and create voltage distortion (or harmonic voltages) as they pass through upstream power system impedance components such as cables, transformers, and generators. In general, the further away from the source of harmonic currents (i.e., the loads), the less voltage distortion you will see. Certainly, exceptions exist, and harmonic voltages may be "produced" by some equipment, some generators, for example, but the general discussion of this paper deals with standard considerations when dealing with typical harmonic producing loads in commercial and industrial power systems.

Often when the subject of power quality arises, people automatically assume that the subject is related to harmonics. These two terms have been interchanged and unfortunately much confusion has occurred as a result. The subject of harmonics is a subset of power quality (PQ). Other power quality considerations include voltage variations (sags, interruptions, flicker, etc.), transients (surges, lightning, switching events), and grounding—all of which are significant subjects on their own. Therefore, every PQ problem is not related to harmonics.

With regard to harmonic problems, the bottom line is this: Harmonics are not a problem unless they are a problem. As with all power quality concerns, you should not consider something a PQ problem unless the issue is an expense such as: utility penalties, monetary losses, production losses or equipment misoperation. Just because you have harmonic currents flowing in your system and you are measuring voltage distortion as shown in **Figure 1**, you don't necessarily have a problem.

Very often, harmonic issues are raised because the levels have exceeded the IEEE® Std 519-2014 recommended limits somewhere in a power system. The fact is that most equipment can withstand harmonic distortion levels well above these conservative recommended limits. Harmonics are interesting and can be problematic but often are blamed for problems with no real proof. Take the time to learn about harmonics and how power systems and equipment are actually affected, and you'll save yourself a lot of trouble and certainly a lot of money.

Once you have identified that you indeed have a power quality issue related to harmonics, consider this—there are at least ten ways to solve your problem. Which one is right for you and will be the most cost-effective solution and which one will clearly relieve the problems that you are experiencing? The economic discussion requires very detailed analysis and this paper will provide guidelines to assist in making that decision. In addition, selecting a harmonic solution is not always an economic decision in every case. Price and performance are interrelated and considerations for both are necessary to clearly select the "best" solution.

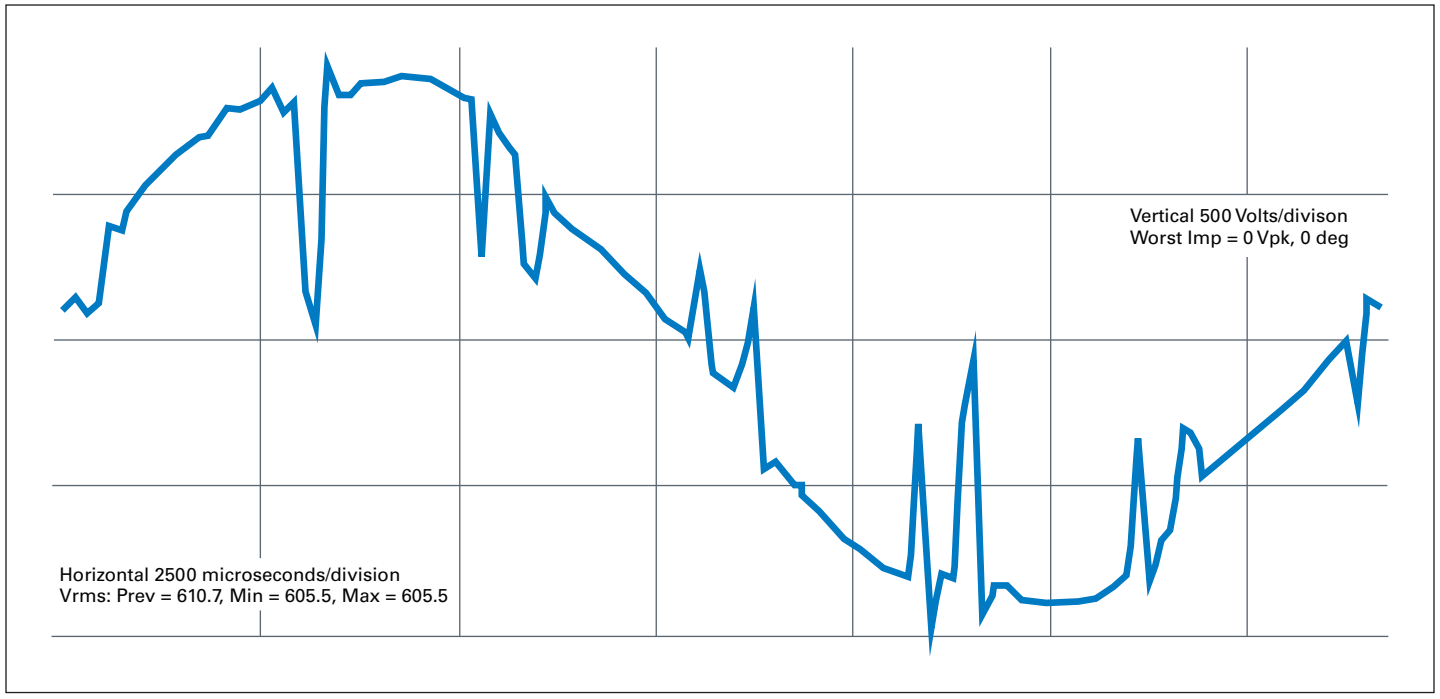

Figure 1. Extreme voltage distortion may or may not be a problem based on the load susceptibility and system conditions

Harmonic sources

Where do harmonics come from? The general categories of harmonic producing loads (also called nonlinear loads) are:

- Power electronic equipment (variable frequency drives (VFD), electronically commutated (EC) motors, rectifiers, computers, LED lights, EV chargers, etc.)
- Arcing devices (welders, arc furnaces, florescent lights, etc.)
- Iron saturating devices (transformers)

Today, the most prevalent and growing harmonic sources are:

- VFDs, EC motors, battery chargers and EV chargers
- Computer power supplies and other electronics
- LED and fluorescent lightning

Table 1 highlights the characteristics or expected harmonics for typical loads of a specific type.

Table 1. Characteristic harmonics by load type

Source	Typical harmonics ①
6-pulse drive/rectifier	5, 7, 11, 13, 17, 19…
12-pulse drive/rectifier	11, 13, 23, 25…
18-pulse drive	17, 19, 35, 37…
24-pulse drive	23, 25, 47, 49…
EC motor	5, 7, 11, 13, 17, 19…
Switch-mode power supply	3, 5, 7, 9, 11, 13…
Fluorescent/LED lights	3, 5, 7, 9, 11, 13…
Arcing devices	2, 3, 4, 5, 7..
Transformer energization	2, 3, 4

① Harmonic magnitude decreases as harmonic order increases.

Note: For VFDs, H = NP ±1
i.e., 6-pulse drive—5, 7, 11, 13, 17, 19…

Harmonic symptoms

How do you know that you have a harmonic problem? The only way to know is to identify symptoms of harmonics. Very often, if you recognize specific symptoms of harmonics, the problem has already created issues on your power system. The trick is to recognize "potential" symptoms and identify potential harmonic issues before they occur or to implement correction into the system design. Sometimes modeling and simple calculations will help identify the issues before they become a problem.

Simply stated, there are two basic concerns:

- Current harmonics cause unwanted current and overheating
- Voltage harmonics cause misoperation of equipment

Symptoms of harmonic problems can be further divided into four major areas: equipment failure and misoperation, economic considerations, application of power factor correction capacitors, and other issues.

The following symptoms are examples of equipment failure and misoperation associated with harmonics on a power system:

- Overheating (motors, cables, transformers, neutrals)
- Motor vibrations
- Audible noise in transformers and rotating machines
- Nuisance circuit breaker operation
- Electrical fires
- Voltage notching
- Erratic electronic equipment operation
- Computer and/or PLC lockups
- Voltage regulator malfunctioning
- Timing or digital clock errors
- Generator regulator malfunctioning
- LED lights flickering

The following are economic considerations that should be evaluated with regard to harmonics:

- Losses/inefficiency (motors)
- kW losses in cables and transformers
- Low total power factor
- Generator sizing
- UPS sizing
- Capacity concerns (transformers, cables)
- Utility-imposed penalties

Applying power factor correction capacitors requires special considerations with regard to harmonics:

- Capacitor failures
- Fuse or breaker (feeding capacitors) nuisance tripping
- Calculated or measured harmonic resonance conditions (series or parallel resonance)

Other significant issues are typically raised with regard to harmonics. Interestingly, these issues are often not real problems but rather hype created by a lack of understanding of harmonics. Many "harmonic problems" are specification issues rather than real problems.

- **Metering**—Do you really have a problem or did you just install a new permanent or temporary meter that can show you the waveform and it "looks like" you should have a problem?
- **Marketing hype based upon a product spec**—Do you even have a problem or is somebody scaring you into believing that a problem exists so you buy their product?
- **Specsmanship**—"Thou shall follow IEEE 519…". While IEEE 519 is a recommended practice (note that the key word is RECOMMENDED), some thought must be given to the practical side of the standard. In addition, applying the IEEE 519 limits at other locations in the power system, other than the point-of-common-coupling (PCC) is typically overkill and often costly or problematic.

Each one of these symptoms or issues could be discussed in its own technical paper but suffice it to say that the magnitude of the "cost" of these symptoms is typically proportional to the complexity and cost of the solution.

IEEE Std 519-2014

IEEE Std 519-2014 is *"The IEEE Recommended Practice and Requirements for Harmonic Control in Electrical Power Systems"* and is the most recent standard for harmonic regulations. This update (2014) superseded the IEEE Std 519-1992 recommended practice. Surprisingly, the standard reduced the scope and details of the earlier version and now the standard is a much more concise document. The original IEEE Std 519-1992 was 93 pages and the updated 2014 document is only 17 pages. This is rare for standards to reduce scope and content to clarify the message but the authors of this paper are convinced that this is the most significant change to help users of the standard understand its meaning and content. The major changes between the 1992 and 2014 are highlighted in **Table 2**.

Table 2. IEEE 519 1992 vs 2014 standard

IEEE Std 519-1992	IEEE Std 519-2014
Detailed	Concise
Focused on teaching where harmonics come from, effects of harmonics, resonance and issues	Focused on recommended limits
Steady-state focus for limits	Limits based on statistical information (based on duration of excessive levels)
Voltage limit (for <1000 V)	Voltage limit (for <1000 V)
= 5% THD	= 8% THD
93 pages	17 pages

The new standard includes statistical information highlighting the fact that harmonic issues are related to the duration of the presence of harmonic currents. In other words, if you turn on a harmonic load for a few seconds, it is typically not as big of a deal as the same load being left on for 10 minutes or 10 hours. Because heating is a major harmonic current issue, these statistical details come into play as to the effect of harmonic currents. For example, a low-voltage soft start uses similar components as a VFD and produces similar harmonics but only until the motor is up to speed whereas the VFD always produces harmonics.

Many people use the voltage and current distortion limit tables to help determine if harmonics will cause a problem on their power system (or their client's power system if they are a consultant). This standard has been seriously misused and misquoted over the years. Many times, solutions are selected based on the misapplication of the standard at a significant cost to the end user.

Table 3 highlights the IEEE 519 total harmonic distortion (%THD) recommendations for voltage as a percentage of the fundamental voltage. **Table 4** shows the total demand distortion (%TDD) as a percentage of the demand load, I_L, which is an important distinction versus the %THD. Generally speaking, this uses the highest demand window, 15 minutes, for example, of 60 Hz current in the calculation and therefore makes the %TDD value a more reasonable one. This is done to avoid using the highest percentage current THD levels when loads might be light and actual harmonic current levels are likely lower than the maximum demand interval. Make sure that you understand the TDD percentages are based on your system capacity and load. Don't assume the required level is 5% for your system when it may be 20%. The greater concern for the IEEE 519 is the voltage distortion and how a customer's current distortion creates problems at another customer based on the PCC.

Table 3. IEEE Std 519-2014 voltage distortion limits

Bus voltage V at PCC	Individual harmonic (%)	Total harmonic distortion THD (%)
V≤1.0 kV≥	5.0	8.0
1 kV<V≤66 kV	3.0	5.0
69 kV<V≤161 kV	1.5	2.5
161 kV<V	1.0	1.5a

Table 4. IEEE Std 519-2014 current distortion limits

Maximum harmonic current distortion in percent I_L Individual harmonic order (odd harmonics) ①②						
I_{SC}/I_L	3≤h≤11	11≤h≤17	17≤h≤23	23≤h≤35	35≤h≤50	TDD
<20 ③	4.0	2.0	1.5	0.6	0.3	5.0
20<50	7.0	3.5	2.5	1.0	0.5	8.0
50<100	10.0	4.5	4.0	1.5	0.7	12.0
100<1000	12.0	5.5	5.0	2.0	1.0	15.0
>1000	15.0	7.0	6.0	2.5	1.4	20.0

① Even harmonics are limited to 25% of the odd harmonics limits above.

② Current distortions that result in a DC offset, e.g., half-wave converters, are not allowed.

③ All power generation equipment is limited to these values of current distortion, regardless of actual I_{SC}/I_L where:
I_{SC}=maximum short-circuit current at PCC
I_L= maximum demand load current (fundamental frequency component) at the PCC under normal load operating conditions

Sample specifications in excess of the IEEE recommendations

Voltage THD and current TDD specifications are frequently applied more stringently than the standard. You can always apply these more stringent levels but this is not the intent of IEEE 519. These recommended levels only apply at the PCC.

The following is wording from a sample specification. Note that this is not a recommendation but rather a sample misinterpretation of the IEEE 519 standard for a drive installation.

> *The harmonic distortion values resulting from the operation of all or any variable frequency drive-driven motor load combinations operating at full load shall be limited as defined in the latest edition of IEEE Standard 519.*

This statement would make you think that you need to correct harmonics on every drive. This brings up the broader discussion of the location of the PCC (see following section). Also, even with this statement as a header (in the same specification), the first four statements below contradict the IEEE 519 recommendations for systems less than 1000 V (the most common application especially as it relates to low-voltage VFDs).

- Maximum allowable THD: 3% of fundamental X
- Maximum allowable individual frequency harmonic voltage distortion: 3% of fundamental X
- Maximum allowable individual frequency and total harmonic current demand distortion (TDD): 5% of fundamental X
- The harmonic distortion levels shall be specific to the switchboard bus supplying one unit or a group of VFDs X
- The cost of any and all corrective equipment to limit the harmonic levels to these values shall be the responsibility of the manufacturer

While this specification, as written, will significantly minimize any power system harmonics well below any desirable levels, it is clearly beyond the recommendations put forth by the standard. As it turns out, the specifying engineer will cover any potential problems before they occur but will unnecessarily increase the cost of the job. A more practical approach is recommended. That being said, the cost of corrective equipment after the fact is typically higher so the required limitations should be considered and some concessions may be made between the designer, end user, manufacturer, and perhaps the utility to both fulfill the IEEE requirements while implementing an economic and practical solution.

Voltage or current harmonics?

Another statement related to IEEE 519 that often causes significant controversy is the following:

> *The selected firm is to design and implement remedies that would reduce the total harmonic distortion on the secondary side of the main service transformer to less than 5%.*

The question in this case is—voltage or current harmonics? The main concern of the standard is voltage distortion. In some cases where the ISC/IL is low (i.e., the loading is a high percentage of the system capacity), the current distortion limit is 5% (but merely to minimize the voltage distortion). The IEEE 519 standard clearly states that harmonic currents should be reduced to minimize voltage distortion. Harmonic currents should also be reduced to minimize loading on the system but even the maximum allowable TDD for current (20%) distortion will only increase the total root-mean-square (rms) current by approximately 2% (i.e., 100 A of 60 Hz current and 20 A of harmonic current add together to equal 102 A rms as shown in **Figure 2**).

From a practical standpoint, if you designed a system to operate for a maximum load of 100 A of current and you had 102 A of current (with the addition of harmonics) one would hope that your system design included enough of a safety margin to account for such a small change in rms current. Most will argue here that the harmonics cause more heating and more degradation, etc. However, this is covered by reasonable safety margins built into design and is not significantly different than the 60 Hz margins. Again, the point goes back to the main intention of IEEE 519 to limit voltage distortion by controlling current distortion.

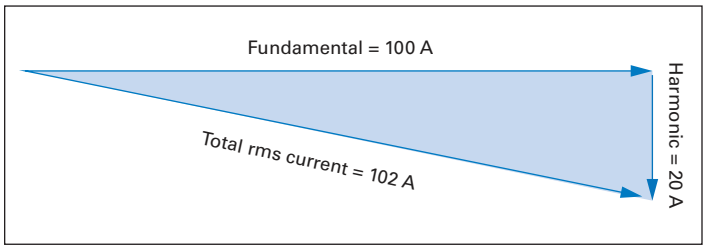

Figure 2. rms current with 20% THD

PCC

By the standard, the PCC is where other utility customers can be served and is not necessarily the secondary of the main service transformer as shown in **Figure 3.** It is not a downstream panelboard, motor control center (MCC), feeder or load like a VFD. Note that sometimes in utility contracts, the PCC can be explicitly defined at locations other than as defined in IEEE 519, such as a metering point. Be wary of equipment manufacturers, contractors, or engineers insisting that a single load must comply with the IEEE 519 voltage and current recommendations at the load installation point. This was never the intention of the standard. The distortion limits set forth by IEEE Std 519-2014 apply only at the PCC, because your interaction with other customers is the purpose of the standard. Your facility may have very high levels of distortion but you won't hear about it externally until your effect on the utility at the PCC exceeds the recommended limits. What you decide within your facility has more to do with the symptoms and effects of harmonics on your electrical system and loads.

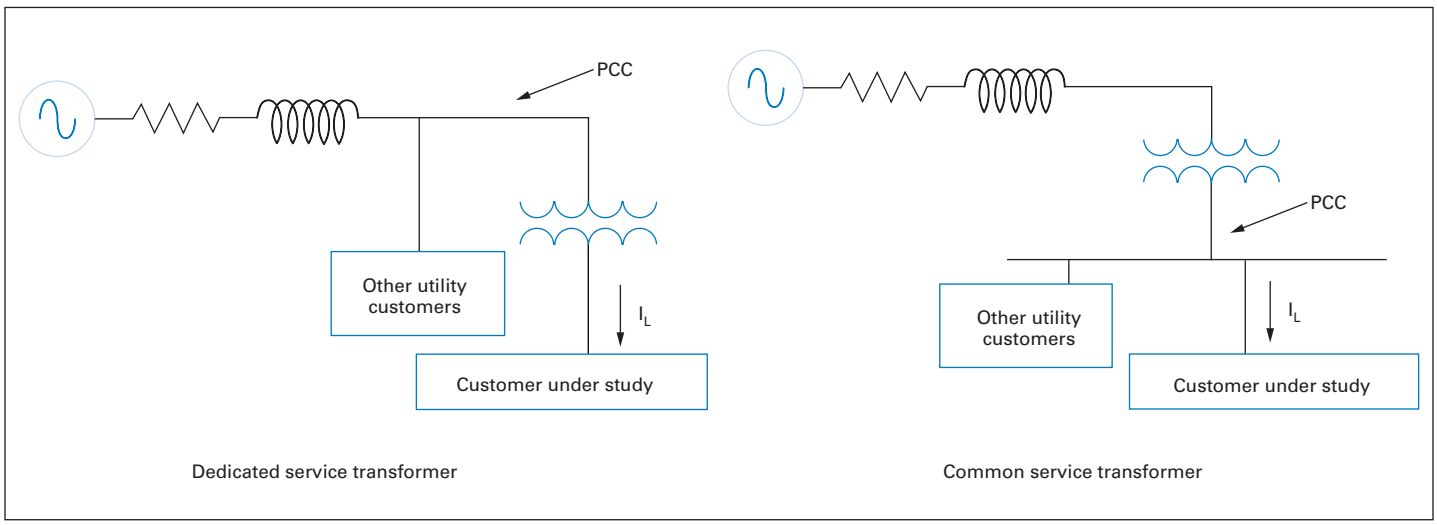

Figure 3. IEEE 519 PCC definition

Harmonic solutions

The following are harmonic solutions that are commercially available products or combinations of products for reducing harmonic currents and minimizing harmonic voltage distortion on a power system. These harmonic solutions are divided into three major categories:

- Individual load solutions (typical for industrial facilities and some larger commercial facilities)
- System solutions to correct the harmonics for groups of loads
- Harmonic solutions with the primary benefit of correcting power factor

Individual load harmonic solutions

In this paper, we will highlight the following individual device solutions that generally match up with one device or are included with one individual VFD, EC motor, or UPS:

- Line reactors
- DC chokes
- Isolation transformers
- Drive dedicated harmonic filters
- 12-pulse drives
- 18-pulse drives
- 24-pulse drives (medium voltage)
- Active front end drives
- Large UPSs with active front ends

Low distortion loads

There is also a category of loads that correct the harmonics within the device and are often called low distortion loads. This clearly adds cost to the device but they are often selected in lieu of detailed analysis and sizing considerations for individual harmonic solutions or for system solutions. There has been a significant move toward these devices, especially power supplies for data center servers where all servers previously used very harmonic rich (>80% THD) switched mode power supplies and now nearly all use PF corrected power supplies that are almost perfectly sinusoidal or linear as shown in **Figure 4.**

These include:

- PF corrected (harmonically corrected) power supplies
- Low THD rectifiers
- Low THD lighting (LED and florescent)

These loads are designed to eliminate the need for significant harmonic correction on an individual load basis and minimal, if any, correction on a system basis. Because the cost of these devices are purely market driven by the manufacturers, they are not considered here in this summary of harmonic solutions. Although active front end drives and UPSs could fit in this category, for the purpose of this paper, they are categorized with individual harmonic solutions as there is a simple method of adding the cost of the VFD to the harmonic solution to make a technical and economic comparison for these loads.

System solutions for harmonic correction

The following harmonic solutions use a system approach to correct the harmonics for groups of loads for commercial and industrial power systems:

- Tuned harmonic filters (shunt connected)
- Phase shifting (and/or harmonic mitigating transformers)
- Active harmonic filters
- Neutral blocking filter (3rd harmonics)
- Oversized equipment (transformers, generators, conductors, etc.)

Power factor solutions that address harmonics

Because harmonics and power factor are closely related, we will highlight the following harmonic solutions related to power factor:

- Tuned and detuned harmonic filters (shunt or parallel connected)
- Active filters
- Hybrid systems

Finally, it's important to note that most non-active rectifiers on the front end of VFDs, battery chargers, and other converters use diodes and therefore, naturally draw a current that is 'in-phase" with the voltage. They have a high displacement (60 Hz) power factor and don't typically require additional PF correction. This will be discussed later in the document.

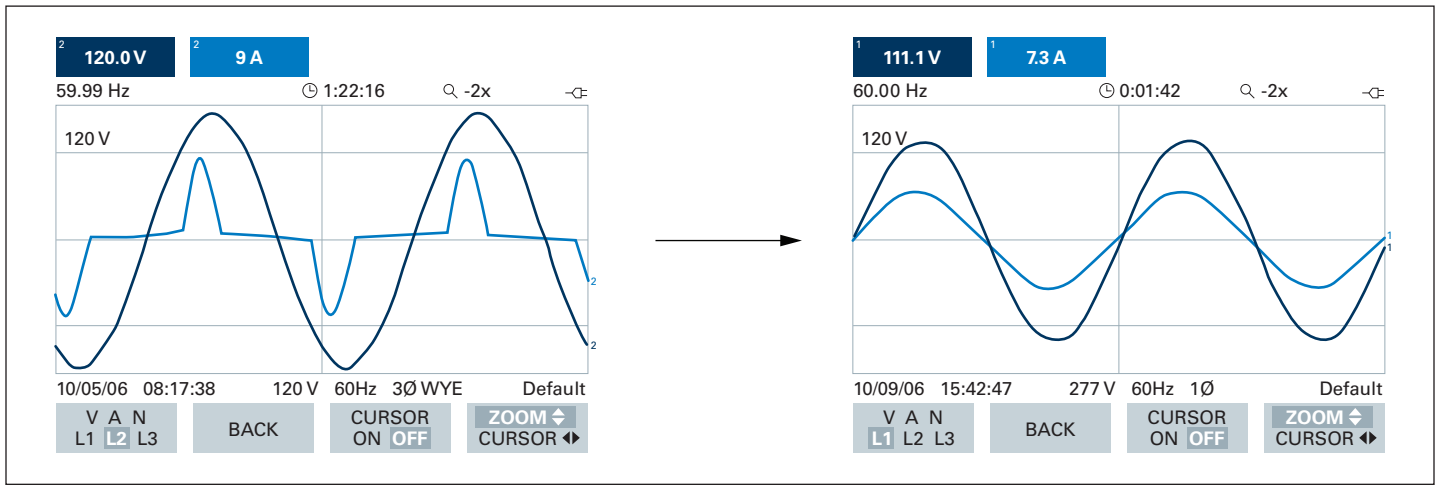

Figure 4. Voltage and current waveforms for switched-mode power supplies (left) and PF corrected power supplies (right)

Individual load solutions

The following solutions are for drive or three-phase rectifier (battery charging systems or EC motors, for example) applications where a significant amount of harmonic current is generated by the load.

Line reactors

The term line reactor and choke are used interchangeably when talking about an inductive impedance used to "slow down" high frequency currents. The concept is that current cannot change instantaneously through a reactor and the higher the frequency, the more a reactor tends to impede the flow of current with the following equation,

$$Z_L = 2\pi fL$$

where L is the inductance and f is the frequency. For higher frequencies (i.e., harmonics) line reactors or chokes offer impedance to constrict harmonic current flow from the loads.

For AC VFDs, we will distinguish here between AC line reactors, which may be internal or external, and DC chokes built inside the drives as two distinct solutions for harmonics. Note that they can be used in conjunction with each other and have a compounding effect and benefit based on the total effective impedance of the two in series.

A line reactor is a three-phase series inductance on the line side of a drive. With a 5% line reactor, the %THD for a single drive is typically in the range of 30–35%. If a line reactor is applied on all VFDs, it is possible to meet IEEE guidelines where less than 15% to 40% of system loads are VFDs and the rest is linear (60 Hz loads) depending on the source impedance of the system and the value of line reactance.

Line reactors are available in various values of impedance percentages, most typically 1%, 3%, and 5%. It is important to note that this value is a percentage based on the drive size or kVA. If 1 hp = 1 kVA as a simple assumption, then a 5% reactor sized for a 30 hp drive will offer 2.5% impedance on a 15 hp drive. Therefore, care must be taken to account for this difference and specifying the correct size. Also, note that the benefit of a reactor is based on the loading so at a lighter load the effective impedance is less. **Figure 5** shows a line reactor as it would be electrically mounted in front of a VFD.

Note that people often worry that if you apply a 5% line reactor, or more excessively, a 10% line reactor, the voltage drop in front of your VFD will be 5% or 10%, respectively. This is not the case. A simple load flow analysis would show you that because AC drives have a high power factor (usually displacement PF >96%), the actual voltage drop from an inductive impedance is tangential to the load current and the voltage drop is significantly less (on the order of 1%, for example). Therefore, adding more impedance is not a concern for voltage drop and usually has a significant benefit. If you decide to add external reactance to a drive, consider 5% at a minimum.

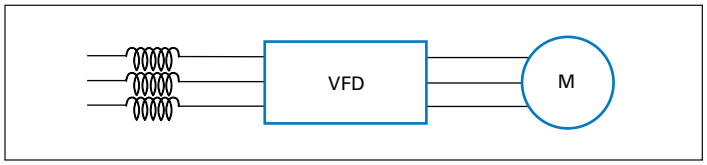

Figure 5. Line reactor with VFD

Figure 6 shows an example of the benefit of using line reactors as they are applied in **Figure 5**.

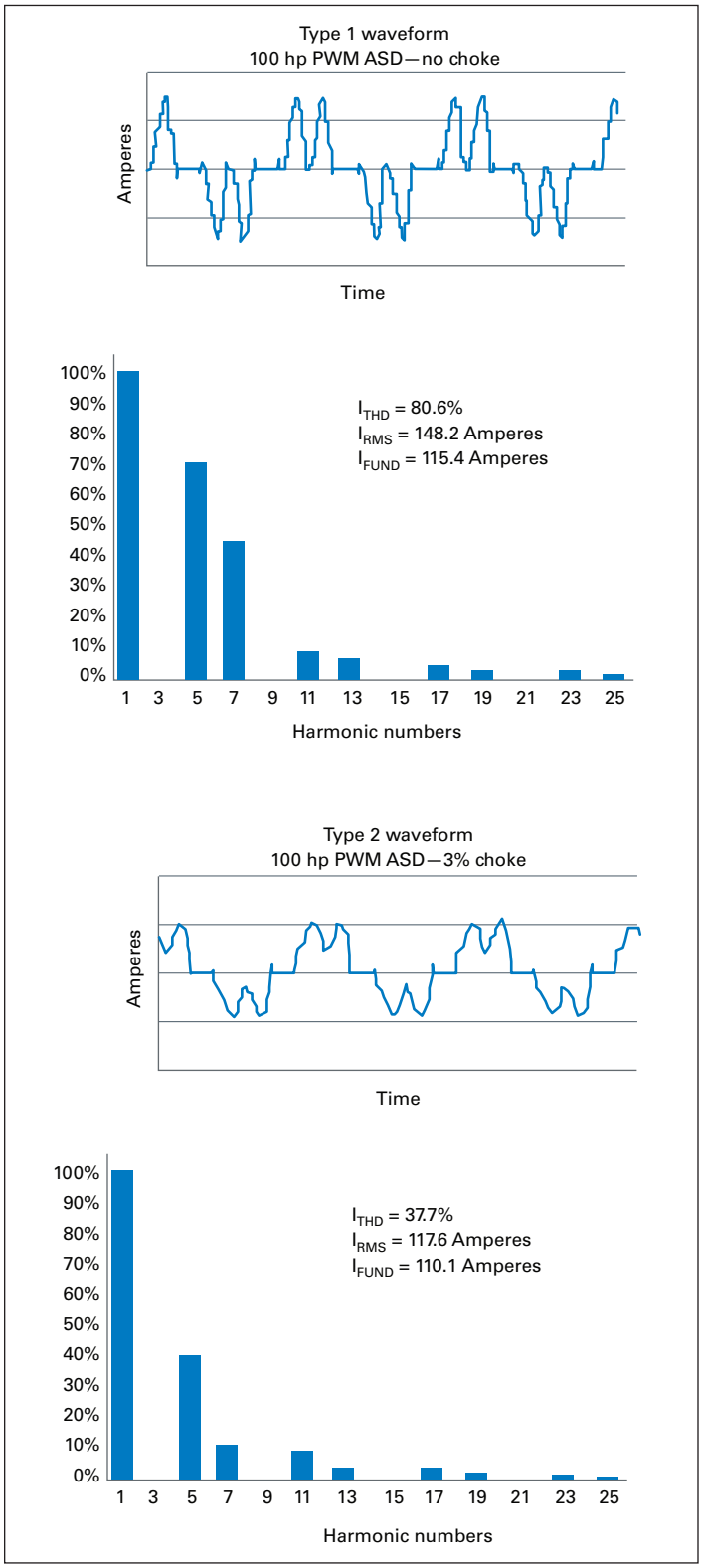

Figure 6. Benefit of line reactors

Table 5 and **Figure 7** summarize the typical current distortion for a drive with a line reactor of varying sizes.

Table 5. Line reactor vs. expected %THD for a single drive

Line reactor	Expected %THD
1%	85%
3%	35–45%
5%	30–35%

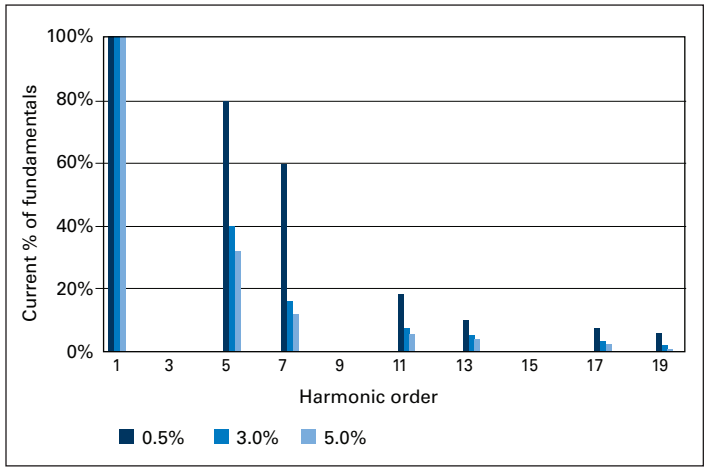

Figure 7. Effect of line reactors and DC chokes on harmonic generation

DC choke

A DC choke is simply a series inductance (reactor) or pair of inductors on the DC side of the semiconductor bridge on the rectifier side of the VFD. Generally speaking, the DC choke is equivalent to the benefit of the AC line reactor from a harmonic standpoint based on percent impedance.

Because the DC choke is usually two reactors instead of a larger three-phase AC line reactor, the DC choke can provide more percent impedance for the same physical space if it is built into a drive. For example, you may be able to buy a drive with a 3% AC line reactor built in or for the same physical size, a drive with a 5% DC choke as shown in **Figure 8**. Purely from a harmonics benefit, the 5% DC choke will outperform the 3% line reactor.

Similar to the AC line reactor, if a DC choke (or line reactor) is applied on all VFDs, it is possible to meet IEEE guidelines where less than 15% to 40% of system loads are VFDs and the rest is linear (60 Hz loads) depending on the source impedance of the system and the value of line reactance.

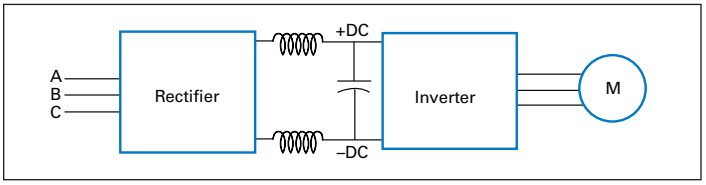

Figure 8. DC choke

LINE REACTOR

Advantages

- Low cost
- Can provide moderate reduction in current harmonics, which translates to voltage harmonic reduction
- Available in various values of percent impedance
- Provides increased input protection for VFD and its semiconductors from line transients
- Helps to reduce cost of supplemental solutions (i.e., active, passive filters) to achieve IEEE 519 guidelines

Disadvantages

- May require separate mounting or larger VFD enclosure
- May not reduce harmonic levels to below IEEE 519-2014 guidelines if VFDs are a significant percentage of overall system load

DC CHOKE

Advantages

- Low cost
- Packaged integrally to the VFD and can fit more percent impedance compared to a similar sized AC line reactor
- Can provide moderate reduction in current harmonics, which translates to voltage harmonic reduction
- Helps to reduce cost of supplemental solutions (i.e., active, passive filters) to achieve IEEE 519 guidelines

Disadvantages

- May have less protection than other methods for the VFD input semiconductors
- Internal DC choke impedance is fixed and if additional impedance is needed, external AC line reactance is required

Isolation transformers

Like line reactors and DC chokes, isolation transformers offer a similar inductive reactance to the front end of a VFD and, therefore, reduce the amount of harmonic current that is "allowed" to flow back into the power system from the drive or other harmonic load. The other benefit of isolation transformers is that they offer electrical isolation from high frequencies that might be imposed on a VFD or other electronics from the utility or other loads. Generally, they are a 1:1 ratio transformer and may be used in combinations to cancel harmonic currents on a distribution system. This will later be addressed in the systems solutions part of the paper.

Most drive isolation transformers are also K-rated transformers. K-rated transformers will be described later in more detail, but for the purpose of this section, K-4 isolation transformers are appropriate for drives and K-13 are appropriate for computer power supplies.

The effective inductive reactance or impedance of the transformer is roughly equivalent to the nameplate impedance. As an example, if you applied a 30 kVA drive isolation transformer with 5% impedance on a 15 hp drive, you would see a 2.5% effective impedance for the benefit of harmonic reduction. Therefore, be careful not to significantly oversize your drive isolation transformers as they might cost you more money with less benefit. A drive isolation transformer would be installed in front of the drive as shown in **Figure 9**. **Figure 10** shows an example of the reduction of harmonic currents because of the inductance of the isolation transformer.

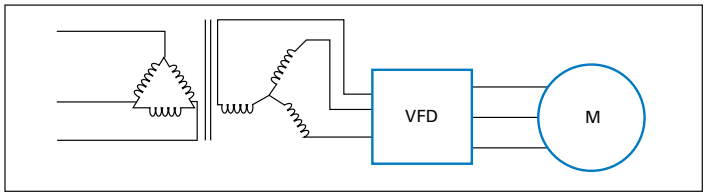

Figure 9. Drive isolation transformer

ISOLATION TRANSFORMER

Advantages

- Can provide moderate reduction in current harmonics, which translates to voltage harmonic reduction
- Can purchase various values of percent impedance according to needs
- Provides increased input protection for VFD and its semiconductors from line transients
- Can be used in combinations with line reactors and transformers for harmonic cancellation

Disadvantages

- Must be sized (fully rated) to match each drive or group of drives
- May not reduce harmonic levels to below IEEE Std 519-2014 guidelines

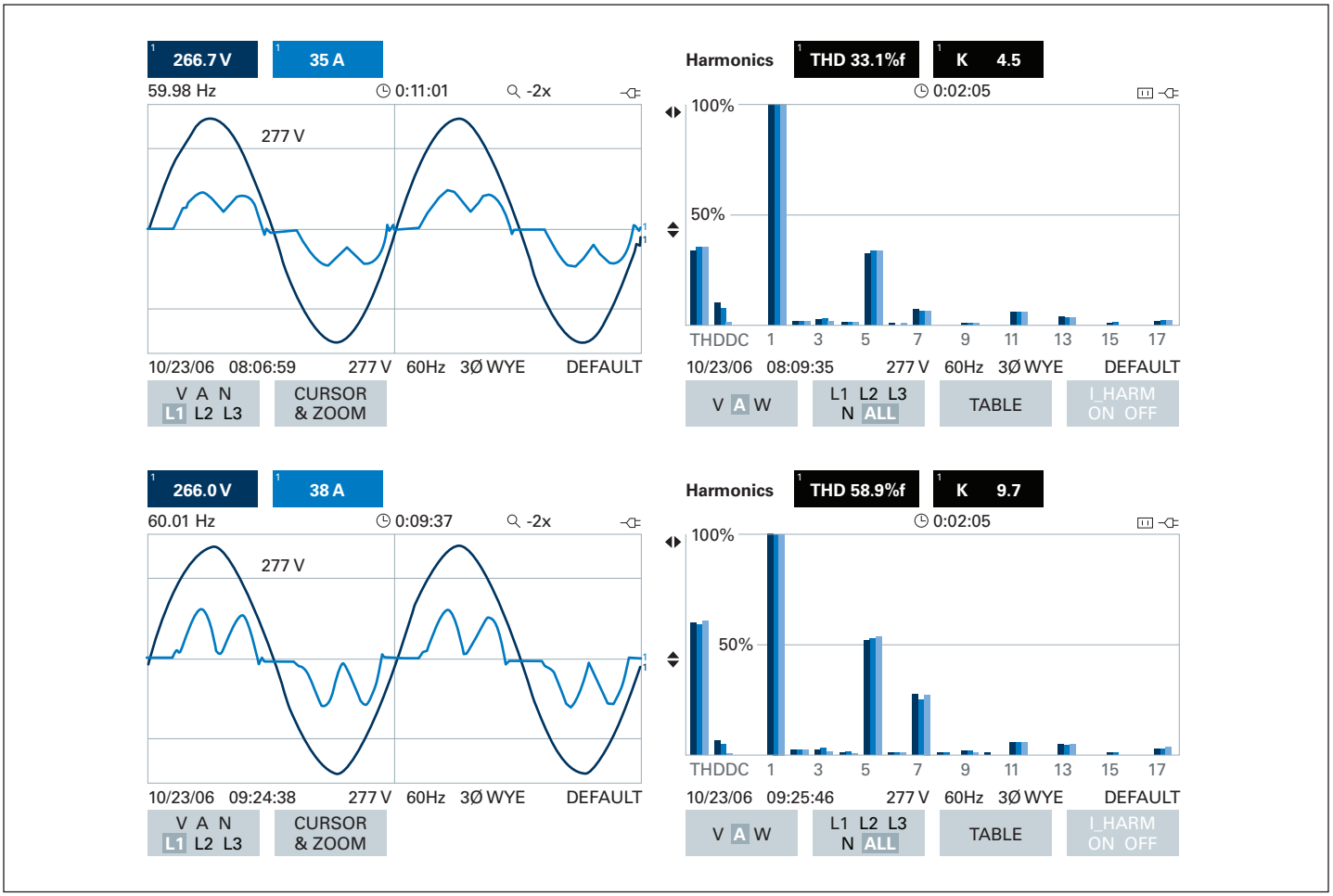

Figure 10. Comparison with (top) and without (bottom) drive isolation transformer

Drive dedicated filters (broadband filters)

Drive dedicated filters are similar to tuned filters but have a design difference. Both single-tuned harmonic filters and drive dedicated filters have a reactor and capacitor in series, connected in parallel to the load (drive). Drive dedicated filters also have a very large reactor (usually about 10% impedance) in series with the drive ahead of the parallel filter connection as shown in **Figure 11**. This line reactor serves three purposes:

- Prevents system harmonic resonance and prevents harmonics coming into the filter from other drives on the system
- Creates a "broadband" effect for the harmonics coming out of the drive (absorbs more harmonics than a single tuned filter)
- Adds additional impedance and significantly limits the harmonics generated by the drive

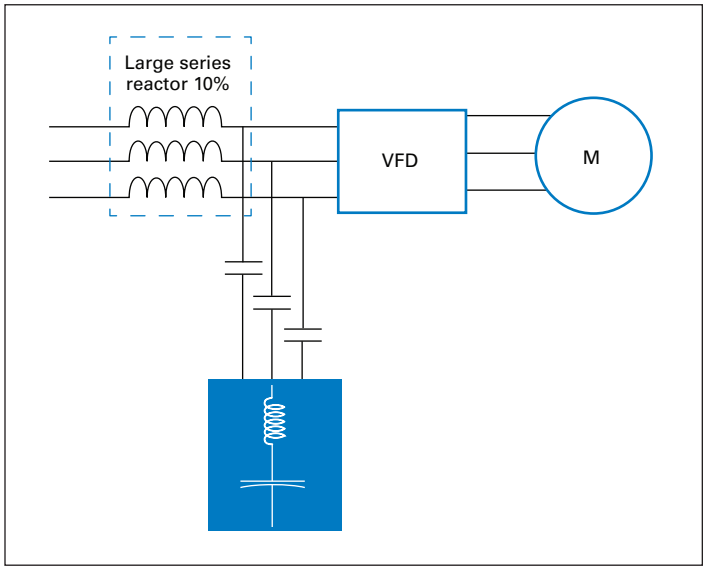

Figure 11. Drive dedicated filter

12-pulse converters

A 12-pulse drive or converter incorporates two separate 6-pulse diode or semiconductor bridges, which are fed from 30 degree phase-shifted power sources with identical impedance. The sources may be two isolation transformers, where one is a delta/wye design (which provides the 30 degree phase shift) and the second a delta/delta or delta/zig-zag design (which does not phase shift or gives a 0 degree phase shift). More commonly, it may also be a "three-winding" transformer with a delta primary and delta and wye secondary windings as shown in **Figure 12**. From a system standpoint, a line reactor of equal impedance to the delta/wye transformer may also be used in lieu of the delta/delta transformer to save cost. The 12-pulse arrangement allows certain harmonics (primarily 5th and 7th) from one set of diodes to cancel the harmonics of the second. Up to approximately 85% reduction of harmonic current and voltage distortion may be achieved over a standard 6-pulse converter. This permits a facility to use a larger percentage of VFD loads under IEEE Std 519-2014 guidelines than allowable using line reactors or DC chokes.

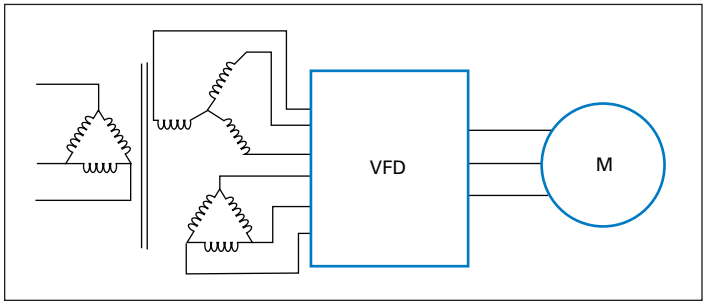

Figure 12. 12-pulse drive

DRIVE DEDICATED FILTER

Advantages

- Effectively makes a 6-pulse drive into 12/18-pulse equivalent
- Provides increased input protection for VFD and its semiconductors from line transients
- Provides added protection for VFD input power section
- Provides system power factor correction
- Can mount in MCC with drives

Disadvantages

- Higher cost
- For drives outside of MCC, separate mounting required
- Requires one filter per drive even for redundant systems so you my need 2X filters for an application
- May raise the voltage significantly or create lead power factor during light loading and may require a contactor in series with the shunt filter

12-PULSE CONVERTER

Advantages

- Reasonable cost, although significantly more than reactors or chokes
- Substantial reduction (up to approx. 85%) in voltage and current harmonics
- Provides increased input protection for VFD and its semiconductors, from line transients similar to a drive isolation transformer

Disadvantages

- Impedance matching of phase-shifted sources is critical to performance
- Transformers often require separate mounting or larger VFD enclosures
- May not reduce distribution harmonic levels below IEEE Std 519-2014 guidelines

18-pulse drives—differential delta

This method is similar to 12-pulse converters, although instead of using two phase-shifted power sources and semiconductor bridges, three are used separated by 20 degrees. Eaton uses a specially wound autotransformer (differential delta) and 18 input semiconductors (diodes). When this arrangement is used, over 90% of harmonic currents are canceled resulting in 3–5% THD.

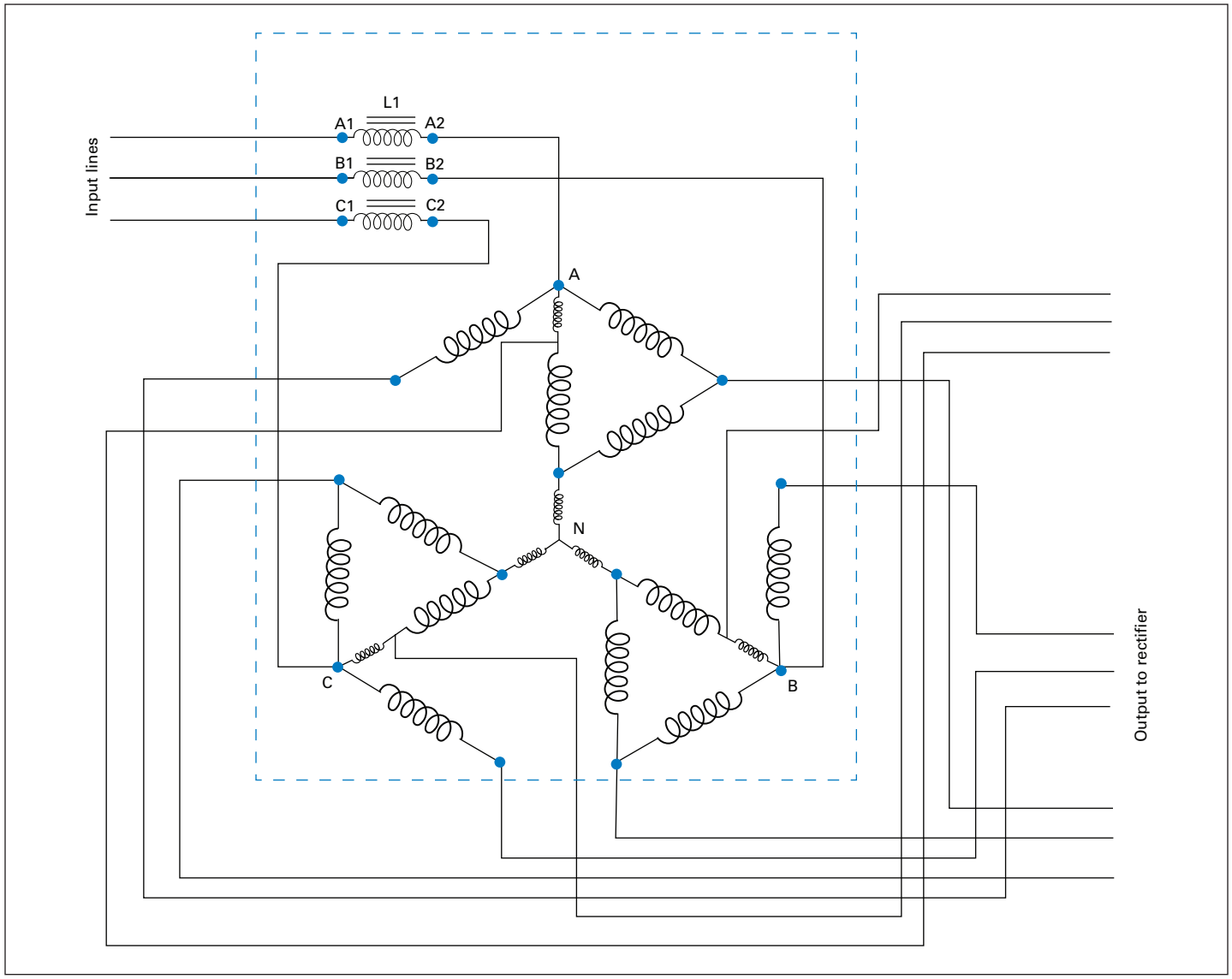

Figure 13. Differential delta transformer (18-pulse) drive with optional AC choke

18-PULSE DRIVE—DIFFERENTIAL DELTA

Advantages

- Virtually guarantees compliance with IEEE Std 519-2014
- Excellent cost benefit for drives >100 hp
- Provides increased input protection for VFD and its semiconductors from line transients
- Up to 4 times the harmonic reduction of 12-pulse methods
- Smaller, lighter transformer than the isolation transformer used in 12-pulse converter
- Lower total cost of harmonic correction when including drive cost

Disadvantages

- Higher cost for smaller sizes
- Larger and heavier magnetics than some other methods
- Larger physical size with transformer, protective devices, and cabinet

24-pulse medium-voltage converters

24-pulse drives are similar to 12-pulse and 18-pulse drives or rectifiers used for other purposes. They typically use diodes in the front end rectifier and there are four sets of six per three-phase converter. These four sets are phase shifted by 15 degrees (typical is 0 degree, 15 degree, –15 degree, and 30 degree phase shifts). By phase shifting this way, 5th, 7th, 11th, 13th, 17th and 19th harmonics are canceled and the characteristic harmonics that remain are multiples of the 23rd and 25th. Because of this phase shift, the total harmonic current distortion is often 2–3% or less.

This is especially important for larger drives and, for that reason, most medium-voltage drives use 24-pulse converters. These 1,000–10,000 hp drives could have a significant effect on the system if 6-pulse or even 12-pulse drives were used. Low-voltage systems may use 24-pulse cancellation with multiple transformers, which will be discussed later.

24-PULSE MEDIUM-VOLTAGE CONVERTER

Advantages

- Guarantees compliance with IEEE Std 519-2014
- Excellent cost benefit for very large MV drives >1000 hp
- Provides increased input protection for VFD and its semiconductors from line transients
- Packaged unit yields high output per footprint

Disadvantages

- Higher cost for smaller sizes
- Larger physical size with transformer, protective devices, and cabinet
- 5 kV and 15 kV drives require special electrical safety knowledge

Active front end (AFE) drives

AFE drives have become a popular option for harmonic reduction. A simple comparison of a standard drive versus an AFE drive is shown in **Figure 14** and **Figure 15**. The AFE drive uses the same IGBT components for the front end rectifier and the output inverter. These IGBTs add additional cost versus the traditional diodes used on the front end rectifier and they also require significant filtering for the pulse width modulation (PWM) high frequencies. However, harmonic currents seen at the front end of the drive are significantly reduced.

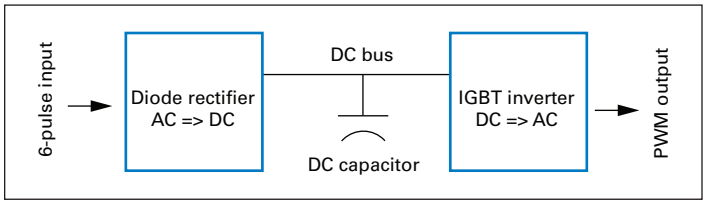

Figure 14. Standard AC drive converters

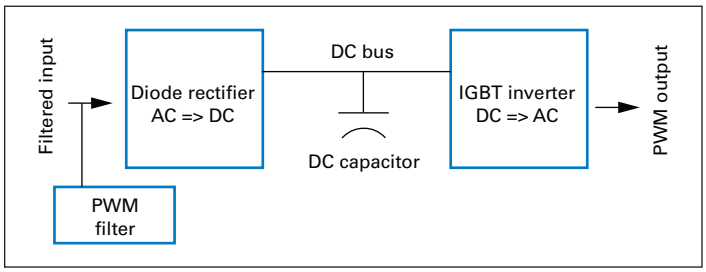

Figure 15. AFE drive compared to standard VFD

AFE DRIVE

Advantages

- Guarantees compliance with IEEE Std 519-2014

Disadvantages

- Much higher cost (2X) versus drive cost
- Added cost doesn't have the same replacement benefit as with AFE uninterruptible power supplies (UPS)
- Increases physical size because of front end IGBTs and filtering
- Requires AFE in every drive so your cost also increases 2X for a redundant drive application

AFE uninterruptible power supplies (UPS)

Like an AFE drive, an AFE UPS has an active rectifier that can significantly reduce input harmonic currents. However, the difference between a UPS with an AFE versus a drive with an AFE is that the original designs for UPSs, especially larger three-phase units, usually included a 12-pulse isolation transformer and/or a dedicated filter and used SCRs on the front end rectifier, which created significant notches in the voltage waveform feeding the UPS. **Figure 16** and **Figure 17** show what the input voltage on a 500 kVA UPS may have looked like prior to AFEs.

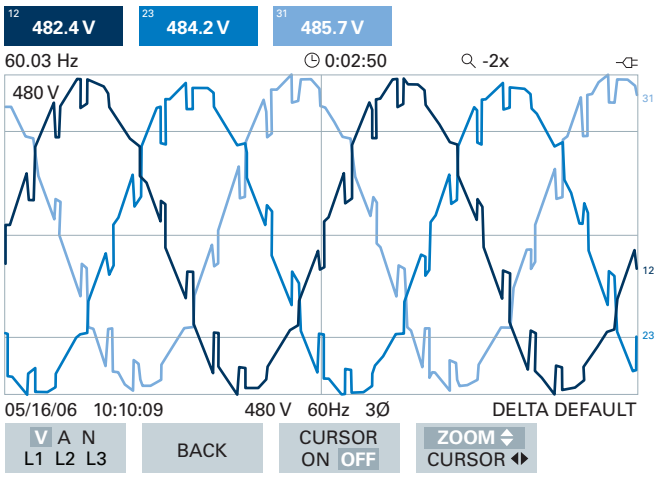

Figure 16. Voltage waveform from traditional 12-pulse SCR UPS with harmonic filter OFF

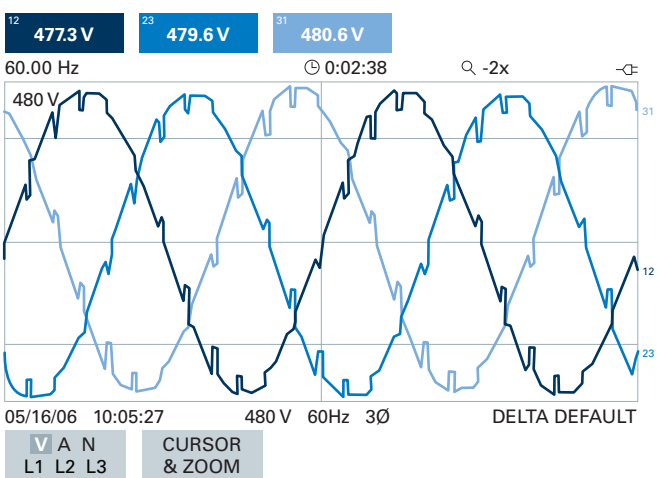

Figure 17. Voltage waveform from traditional 12-pulse SCR UPS with harmonic filter ON

Figure 18 shows what an AFE UPS looks like today. Notice that the isolation transformers, SCRs, and shunt filter have been removed, and with them, their associated cost. The cost of the IGBT rectifier and a small PWM filter was easily justified based on removing the other components. For this reason, nearly all large UPSs today use an AFE, allowing multiple benefits including PF correction, harmonic filtering, and kVA size matching with backup generators.

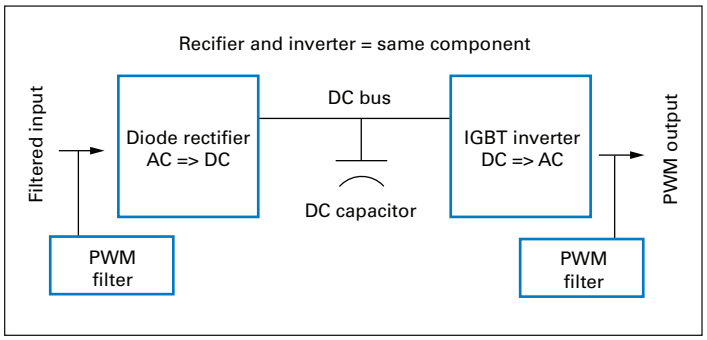

Figure 18. AFE UPS block diagram

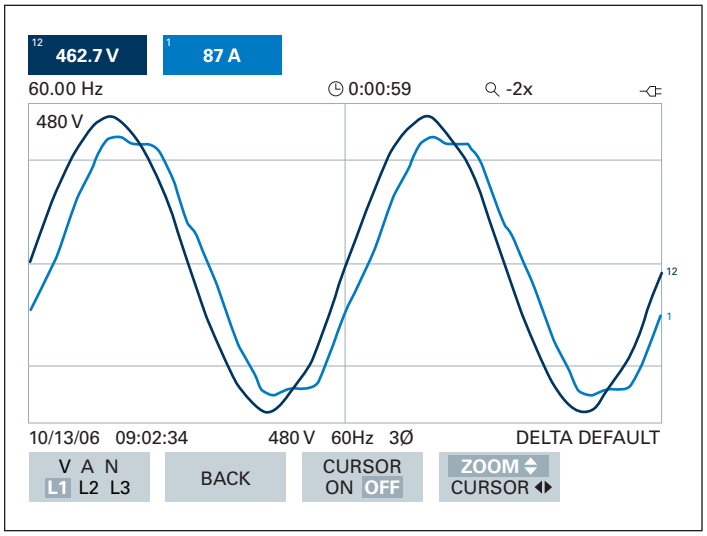

Figure 19. AFE UPS voltage and current waveform

AFE UNINTERRUPTIBLE POWER SUPPLIES

Advantages

- Guarantees compliance with IEEE Std 519-2014
- Equal or lower cost compared to older style UPSs
- Don't need to oversize generator with AFE UPS
- PF corrected units are rated in kW = kVA at unity power factor
- Can use bidirectional converter and participate in utility energy storage and demand response programs
- Rectifier and inverter are identical modules, reducing need for additional spare parts

Disadvantages

- Without isolation transformer on front end of UPS, high-frequency transients require careful design considerations to protect electronics
- At light load, PWM filter may create a leading PF situation

System harmonic solutions

Tuned harmonic filters

A harmonic filter is the combination of a reactor and capacitor in series tuned to a specific frequency and is installed on the line side of a VFD as shown in **Figure 20** or on a common bus for multiple harmonic loads. Power factor correction can be incorporated into a filter design but care must be taken if a filter is applied on a system level so that the 60 Hz capacitive compensation does not increase the system voltage significantly during lightly loaded conditions.

Harmonic filters work by providing a lower impedance than the system or other loads and attracting harmonic currents that flow out of the front end of VFDs and other nonlinear loads. This is illustrated in **Figure 21**. Harmonics, like other 60 Hz current, flow in the phase conductors for three-phase loads and in the phase and neutral conductors for single-phase loads. Many people assume that harmonic filters are connected line-to-ground like EMI filters or surge protectors but they circulate the current to and from the load on phase conductors (or phase and neutral conductors).

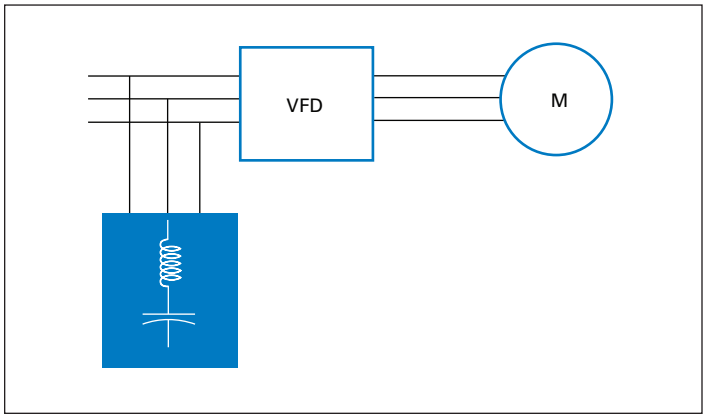

Figure 20. Tuned harmonic filter

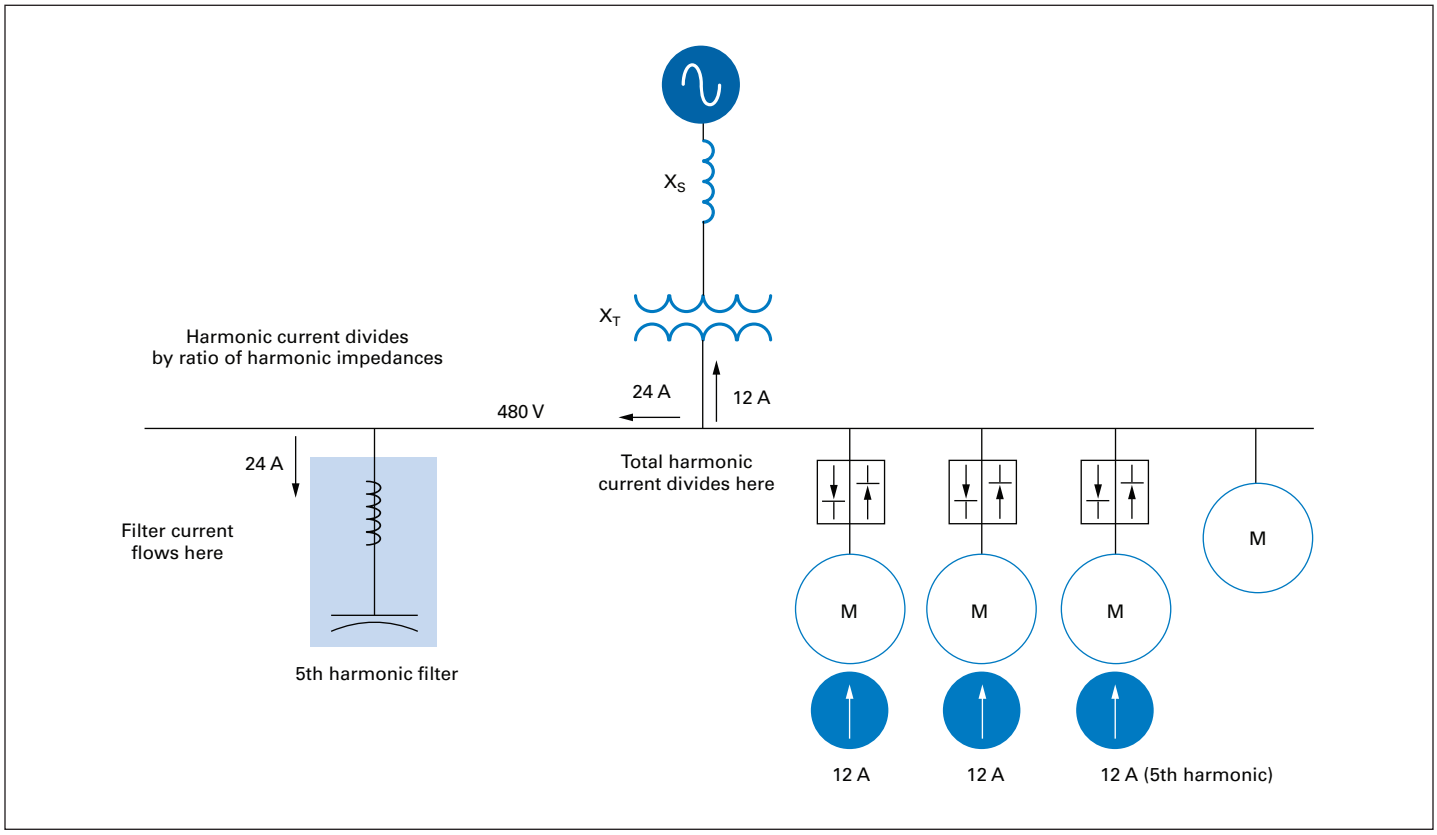

Figure 21. How a filter works

A switched harmonic filter (in steps or stages of 50 kvar, for example, as shown in **Figure 22**) can be used to regulate the amount of 60 Hz and filtering required by dynamically changing loads. These filters are installed in a shunt or parallel connection on the line side of the VFD or on a common bus for multiple harmonic loads. The tuned filter creates a very low impedance at the "tuned" frequency.

For drive loads, these filters are tuned somewhat below the 5th harmonic, to the 4.7th, for example. The 5th harmonic is the largest component of harmonic current distortion and tuning the filter to attract this current will also absorb a small amount of the 7th harmonic current. A 7th harmonic filter or additional filters tuned to higher order harmonics may also be used in conjunction with the 5th filter as shown in **Figure 23**. More care is needed with the application of tuned harmonic filters than with other methods. If they are tuned or applied incorrectly, they can create resonant conditions amplifying the harmonics, creating very high voltage and current distortion. If additional VFD or nonlinear loads are added without filtering, the filter may become overloaded. Harmonic filters are generally fused for protection.

Today, if power factor correction is required on a power system with harmonic sources, a tuned harmonic filter should be applied in lieu of capacitors to supply the reactive power requirements while providing a predictable resonant frequency. Oftentimes, these filters are significantly "detuned" to a lower frequency like the 4.2nd harmonic to allow power factor correction without risk of overloading the filter if more harmonic loads are added and to avoid resonance.

When installed at a facility, tuned harmonic filters absorb harmonics from the same and lower voltage levels as the currents flow back to the utility source from the harmonic producing loads. For example, if the impedance of the filter is 0.5 ohms and the impedance of the upstream transformer is 0.5 ohms at the frequency of interest (i.e., 5th harmonic), then half of the harmonic current will go into the filter and half will flow back toward the utility.

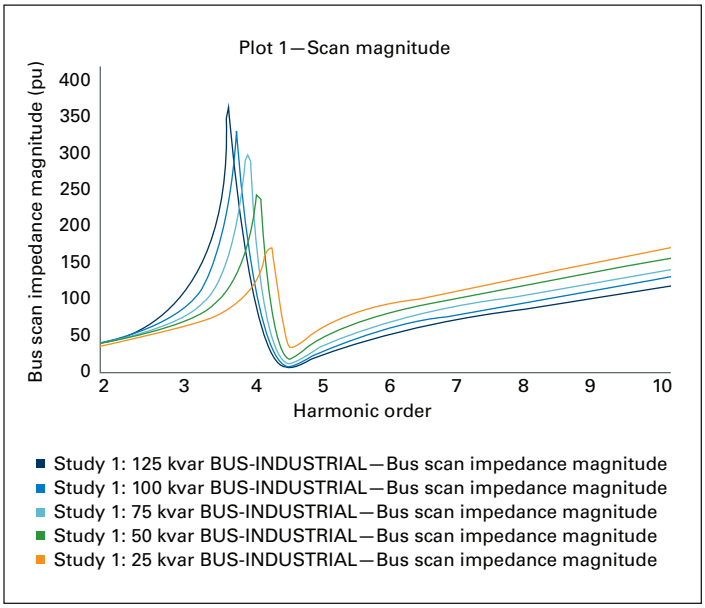

Figure 22. Multi-stage 5th harmonic filter (tuned to 4.8th harmonic)

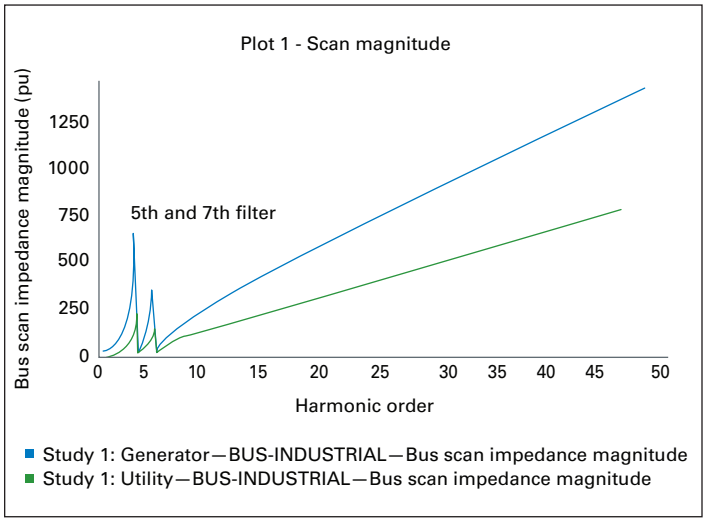

Figure 23. Double-tuned 5th and 7th harmonic filter

TUNED HARMONIC FILTER

Advantages

- Provides power factor correction
- A single filter can compensate for multiple nonlinear loads
- Predictable filtering results can be made prior to installation with a robust power system model through computer simulation

Disadvantages

- Higher cost
- Requires special knowledge for designing and installing filters
- Separate mounting and protective device (breaker/fuse) required
- May not reduce harmonic levels to below IEEE Std 519-2014 guidelines
- Care is needed in application to ensure that the filter will not become overloaded
- Care is needed in application to ensure that overcompensation will not raise the voltage significantly
- Could result in leading power factor during lightly loaded conditions

Harmonic mitigating transformers and multi-pulse distribution

This is similar to a 12-pulse converter, on a system level. If two VFDs of equal horsepower and load are phase shifted by feeding one VFD from a delta/wye transformer and feeding the second through a delta/delta or delta/zig-zag transformer or a line reactor of equivalent impedance, performance similar to 12-pulse can be achieved. The cancellation will degrade as the loads vary from VFD to VFD, although as the load on a single VFD decreases, the individual distortion contribution in amps, resulting in less of a need for cancellation. It is possible for a facility with a large number of VFDs to feed two halves of the distribution system from two phase-shifted transformers, yielding a large reduction in harmonic levels for minimal cost, and allowing a higher percentage of VFD loads under IEEE Std 519-2014 guidelines. Two MCCs phase shifted by 30 degrees with relatively matched VFD loading would achieve this cancellation.

Multiple transformers can be used to develop different phase shifts between sources of harmonic currents. For example, two transformers with a 60 Hz phase shift of 30 degrees between them, as shown in **Figure 24**, will result in cancellation of the 5th, 7th, 17th, and 19th harmonics and will resemble a 12-pulse drive system. Four transformers shifted by 15 degrees with respect to each other will result in a 24-pulse distribution and will significantly minimize the resulting harmonics upstream of the common bus.

This can also be done on commercial power system applications where every other floor utilizes a phase-shifting transformer for stepping the voltage down from 480 V to 208 V. Delta/wye transformers have a 30 degree phase shift and delta/zig-zag have a zero degree phase shift, canceling 5th, 7th, 17th, and 19th harmonics. There are multiple opportunities to cancel harmonics at the common riser bus using phase-shifting transformers. **Figure 25** illustrates that the careful selection of just one transformer in a commercial building could reduce the 5th and 7th harmonic currents on the common bus by a factor of 6.

Engineers often incorrectly assume that there is "natural cancellation" between harmonics produced by the same type of load (VFD, computers, etc.) at a common voltage level. They believe harmonics will naturally cancel with each other without using phase-shifting transformers on a 480 V bus, which is not true. If all of the step-down transformers have identical windings (i.e., delta/wye), then the harmonics from each system add linearly.

On a three-phase, four-wire power system supplying power to single-phase nonlinear loads (computer power supplies, LED lights, for example) significant harmonics (all odd harmonics, generally) flow on the phase conductors as a result of the nonlinear current drawn by the loads. On the neutral conductor, the 3rd harmonic currents (and all odd multiples of the 3rd harmonic, 9th, 15th, etc.—also called triplens) from each phase are added together and can overload the neutral conductors, connections in panelboards and transformers if the situation is not addressed. The neutral current can approach 175% of the phase conductor current.

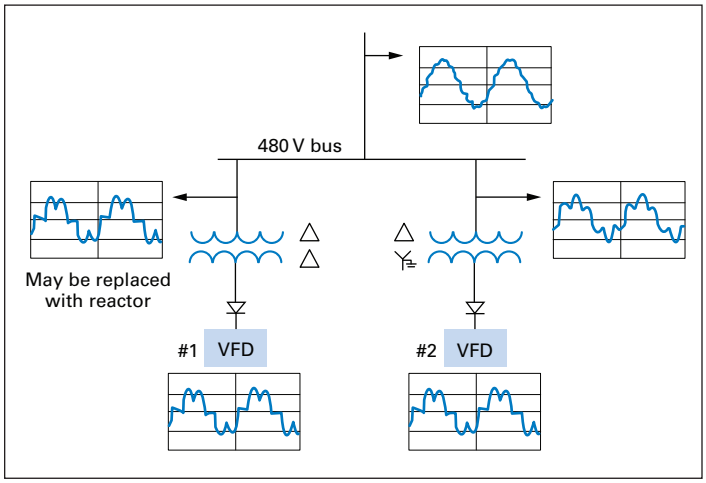

Figure 24. 12-pulse distribution

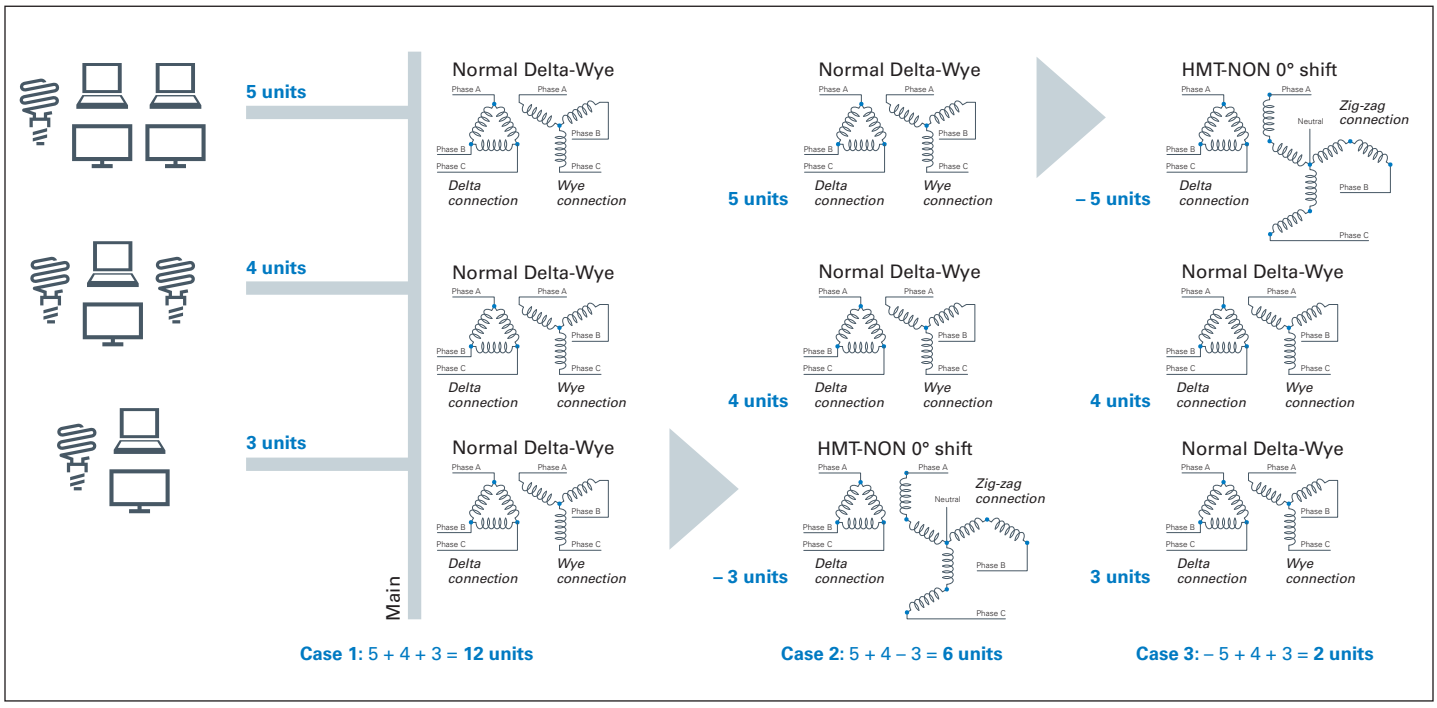

Figure 25. Phase-shifting distribution in commercial buildings

There are a variety of ways to eliminate the harmonics or "live with" the resulting harmonics. Each solution has economic and technical advantages and disadvantages.

Generally speaking, the best solutions for dealing with triplen harmonics involve transformers, which include HMTs and K-rated transformers. When these transformers have delta primary windings, the balanced 3rd harmonic currents circulate in the delta and they don't allow triplen harmonics to flow on the primary of the transformer. HMTs with zig-zag secondary windings don't allow 3rd harmonic currents to couple to the primary winding as shown in **Figure 26** and **Figure 27**.

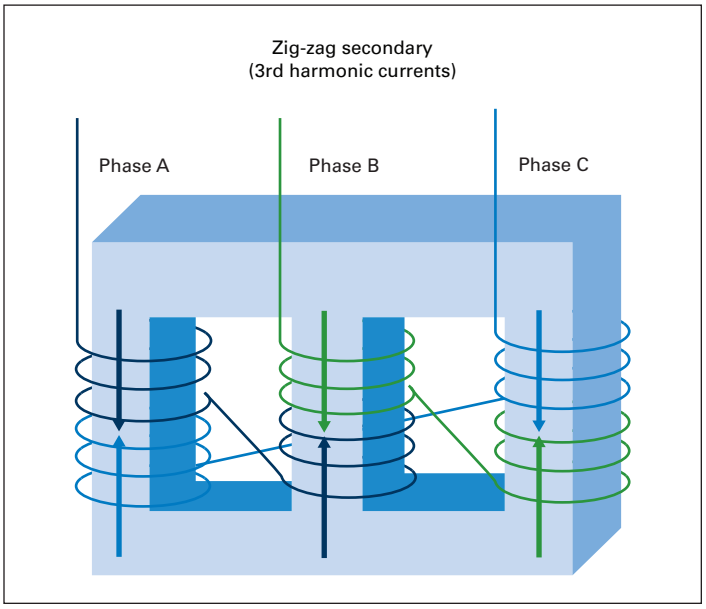

Figure 26. Zig-zag transformer secondary showing 3rd harmonic cancellation on secondary winding

HARMONIC MITIGATING TRANSFORMER AND MULTI-PULSE DISTRIBUTION

Advantages

- Cost may be low depending on implementation (i.e., if transformers are required for step-down)
- No maintenance required for transformers
- Provides substantial reduction (50–80%) in current harmonics thereby improving upstream voltage harmonics
- Provides increased input protection for VFD and its semiconductors from line transients by virtue of the inherent transformer inductance

Disadvantages

- Cost may be high depending on implementation (i.e., if transformers are added only for phase shifting and not needed for step-down)
- Impedance matching of phase-shifted sources is critical to performance
- Maximum cancellation occurs only if drive loading is balanced
- Transformers require separate mounting
- May not reduce harmonic levels to below IEEE Std 519-2014 guidelines

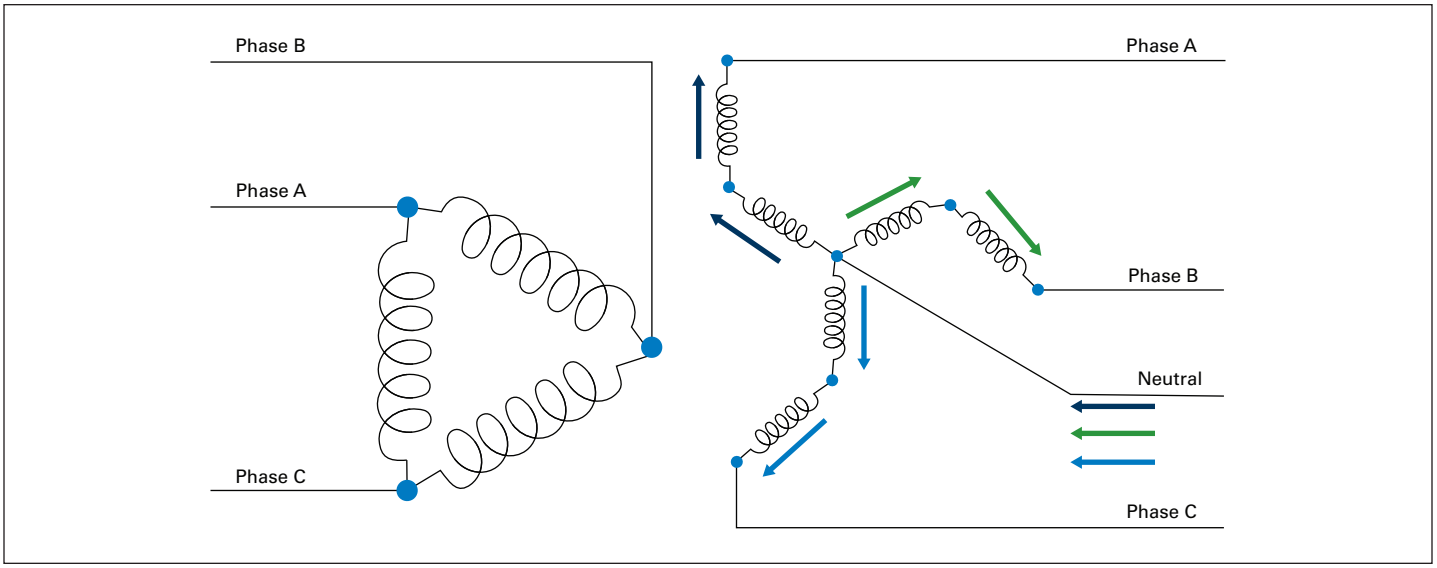

Figure 27. 3rd harmonic current flow on secondary of delta/zig-zag harmonic mitigating transformer

Active filters

This method uses sophisticated electronics and IGBTs to inject equal and opposite harmonics into the power system to cancel those generated by other loads. These systems are often compared to noise cancellation headsets that inject soundwaves to eliminate background noise. These filters monitor the nonlinear currents demanded from nonlinear loads (such as VFDs) and electronically generate currents that match and cancel the load harmonic currents. Active filters are inherently non-resonating and are easily connected in parallel with system loads. Active harmonic filters can be used to compensate for harmonics, harmonics and power factor, or power factor only. They can also be used with existing power factor correction capacitors without concern for harmonic resonance.

Parallel (the more common type) active harmonic filters, as shown in **Figure 28** and **Figure 29**, compensate for harmonic load currents. Parallel (shunt) active filters compensate for voltage distortion by canceling harmonic load currents. The shunt active filter will compensate for harmonics and power factor up to its maximum capability and it cannot be overloaded.

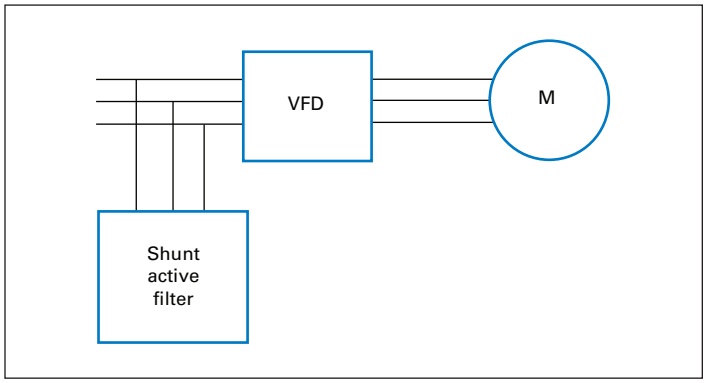

Figure 28. Parallel/shunt active filter

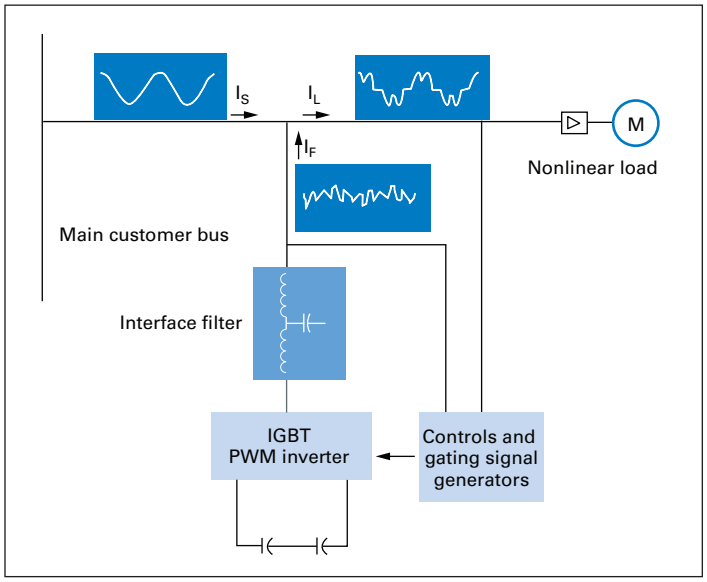

Figure 29. Block diagram for parallel/shunt active filter

Series active harmonic filters, as shown in **Figure 30**, are far less common. They compensate for source harmonics (voltage) but do not compensate for harmonic load currents. Series filters are generally used to protect the load from damaging source harmonics, whereas the shunt filters are designed to protect the system from the load harmonics.

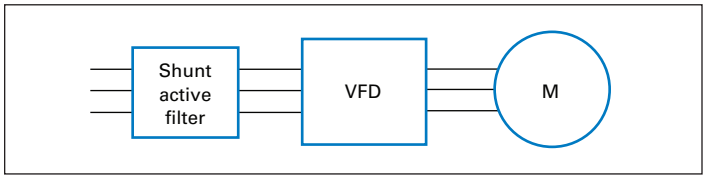

Figure 30. Series active filter

ACTIVE FILTER

Advantages

- Guarantees compliance with IEEE Std 519-2014 if sized correctly
- Shunt unit cannot be overloaded even as future harmonic loads are added
- Harmonic cancellation from the 2nd to 50th harmonic
- Shunt-connected unit provides easy installation with no major system rework
- Provides reactive (var) currents, improving system power factor
- Can be designed into an MCC to compensate for several VFDs
- Can add additional modules/ systems to account for load growth
- When line reactors and DC chokes are optimally sized, active filter size can be significantly reduced

Disadvantages

- Typically more expensive than other methods due to the high performance control and power sections
- Series unit must be sized for total load

Neutral blocking filters

A neutral blocking filter is a parallel capacitor and reactor combination that is connected in series with the neutral conductor as shown in **Figure 31**. These components are "parallel resonant" at the 3rd harmonic, allowing 60 Hz (normal load) current to flow but are an extremely high impedance for the 3rd harmonic current and do not allow the load to "source" current at that frequency. Applying this type of filter to a distribution transformer blocks all downstream loads from generating 3rd harmonics. This has the added benefit of reducing the load current (rms) from all loads and can significantly reduce the losses in the transformer and conductors between the transformer and the loads. When computer power supplies were predominately switch mode power supplies, 3rd harmonics were a significant issue but because more power supplies are power factor corrected (harmonically corrected), these filters are not used very frequently.

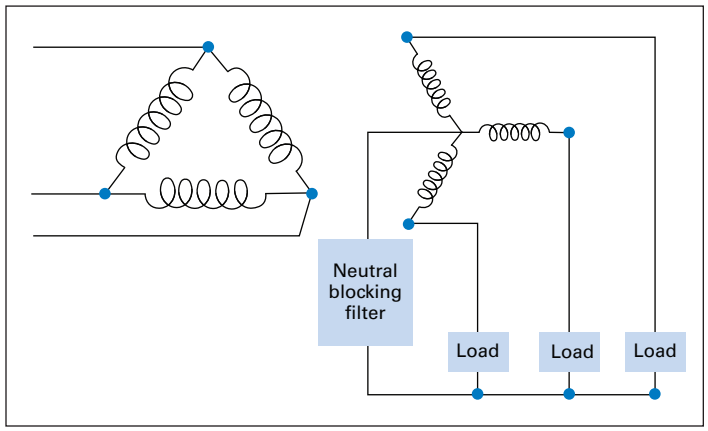

Figure 31. Neutral blocking filter

NEUTRAL BLOCKING FILTER

Advantages

- Reduces neutral currents by more than 80% (by preventing 3rd harmonic current flow)
- Decreases rms phase current by 10–30%
- Releases un-useable capacity by as much as 30%
- Removes 3rd harmonic current from all the system neutrals, from the transformer out to the furthest outlet
- Don't need to oversize neutral conductor

Disadvantages

- High cost
- Sized for transformer neutral maximum expected load
- May increase voltage distortion at load terminals

Overdesigned and oversized equipment (transformers, generators, conductors)

Oversized neutral

Understanding that the magnitude of the neutral current can approach 175% of the current in the phases as shown in **Figure 32** when significant 3rd order harmonics are present, several methods have been developed to "live with" the increased current without spending a significant amount of money. These methods involve either increasing the harmonic capacity of the power system components or derating the components to accommodate the harmonic currents.

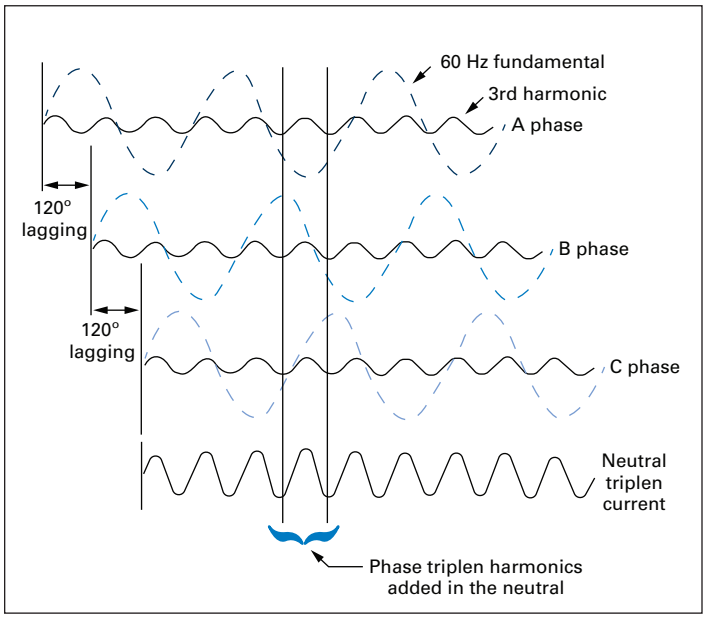

Figure 32. Balanced 60 Hz currents cancel on neutral but 3rd harmonic currents add on neutral

One method of derating the power system components is to double the size of the neutral conductor as shown in **Figure 33**. This involves increasing the neutral conductor size to twice the size of the phase conductor in any circuits where a "shared neutral" is used. This includes panelboards and shared neutral circuits in cubicle furniture in office buildings. Today, for many installations, every circuit includes a phase conductor and its own neutral conductor. Therefore, the only truly "shared" neutral is in the panelboard and on the transformer. However, for existing facilities, this is not always the case.

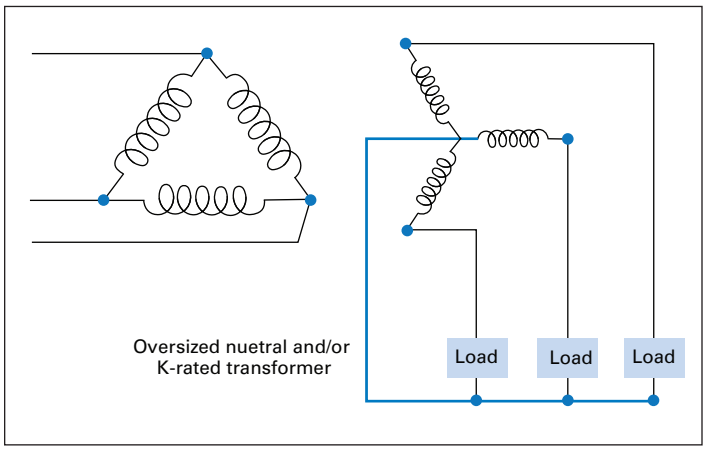

Figure 33. Oversized neutral and K-rated transformer to accommodate high triplen harmonics

K-rated transformers

Underwriters Laboratories® (UL®) and transformer manufacturers established a rating method, the K-factor, for dry-type transformers to evaluate their suitability for duty in a harmonic environment. The K-factor relates the transformer's capability to supply varying degrees of nonlinear load without exceeding the rated temperature rise limits of the transformer. The K-factor is based upon predicted losses as specified in the simplified method of IEEE Std C57.110-1986, *IEEE Recommended Practice for Establishing Transformer Capability When Supplying Non-sinusoidal Load Currents (ANSI)*. The limiting factor related to overheating is assumed to be eddy current losses in the windings.

K-factor rated transformers offer no means to reduce the magnitudes of harmonic current except that they offer impedance (see line reactors section). But the K-factor method allows the engineer to choose a dry-type transformer that can withstand the harmonic duty without damage or loss of performance. The higher the K rating, the higher the expected THD of the loads. Standard K-factor ratings are 4, 9, 13, 20, 30, 40, and 50. A K-4 transformer is suitable for drive loads and a K-13 is suitable for computer or lighting loads. Higher ratings are not as common.

K-rated transformers are designed to "live with" excessive harmonic currents while maintaining typical values of impedance as described earlier in this paper (i.e., these are not simply oversized transformers). Typically, the windings and neutral have a significantly higher rating compared to a standard transformer and the standard connection is delta/wye. Physically, if you looked at a K-rated and standard transformer, a 75 kVA K-rated transformer would look similar to 112.5 kVA standard transformer. With K-rated transformers, the delta winding is said to "trap" the triplen harmonics (3rd's and multiples of the 3rd) as shown in **Figure 34** but both sets of windings must be rated to accommodate the harmonic currents.

For systems supplying primarily switch-mode power supply loads, a K13 is typically appropriate in order to utilize the entire rated capacity (kVA). For VFD applications, a K4 transformer is appropriate to accommodate the expected harmonics.

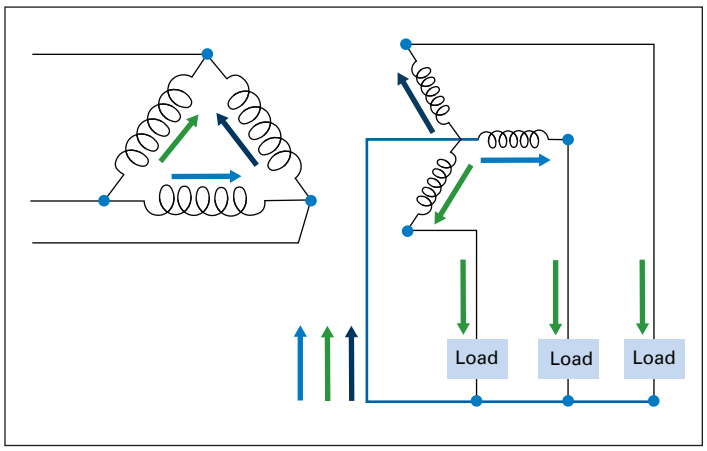

Figure 34. 3rd harmonic accumulating on neutral and circulating in delta winding

Transformer derating

Finally, if a transformer is supplying primarily nonlinear loads and the transformer is not a K-rated transformer or designed to handle harmonics, the transformer should be derated according to the *IEEE Emerald Book* recommendation in **Figure 35**. As an example, a 30 kVA transformer would have to be loaded less than 12 kVA with 100% harmonic load.

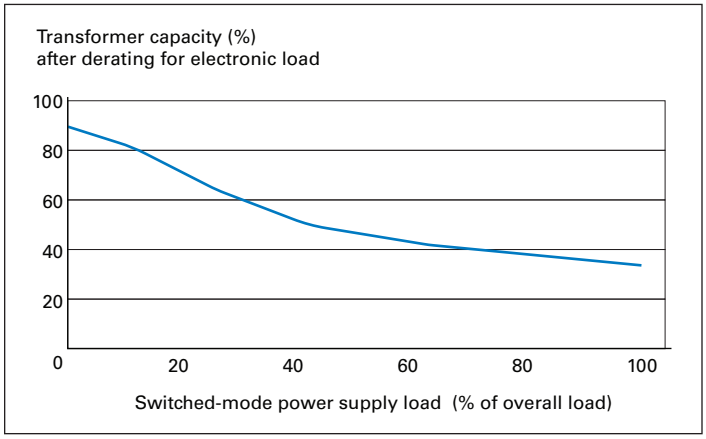

Figure 35. IEEE Std 1100-1999 *(Emerald Book)* transformer derating curve for supplying switch-mode power supplies

Oversized generators

If a backup generator is sized for the kW or kVA of load and supplies power to harmonic loads, the resulting voltage distortion will be substantially higher than when the same loads are supplied by the utility source (transformer). **Figure 36** and **Figure 37** shows the voltage distortion when the source is the utility versus the backup generator. Note that the generator typically has at least three times the impedance of the transformer, causing significantly more distortion. Transformer impedance is typically 5.75% while the impedance (sub-transient reactance), Xd", for an equivalently sized generator is typically 18–20%. For this reason, generators are often oversized to "handle" the current distortion, increasing the cost of generation per kW of load and effectively reducing the impedance and voltage distortion. For example, if a 1000 kW generator has an impedance of 18%, a 2000 kW generator will have a 9% effective impedance on a 1000 kVA basis.

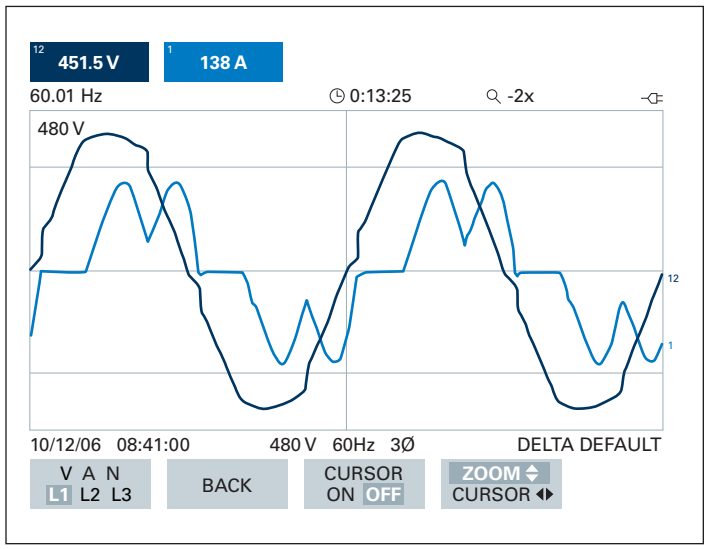

Figure 36. Utility source—4.4% VTHD

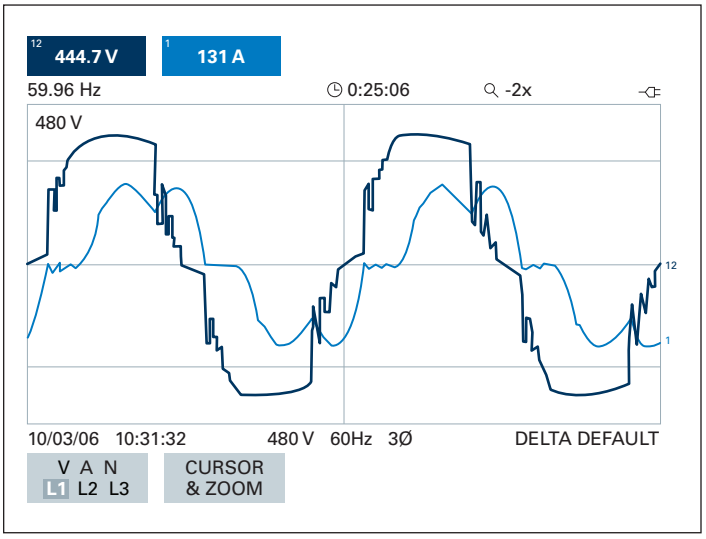

Figure 37. Generator source—13% VTHD

OVERDESIGNED AND OVERSIZED EQUIPMENT (TRANSFORMERS, GENERATORS, CONDUCTORS)

Advantages

- May be the least expensive methods of dealing with harmonic currents on the power system, assuming that the system and other loads can deal with the excessive current and/or voltage distortion
- Because most transformers are not typically loaded to their kVA rating (typical transformer loading is in the range of 30–40%), derating is often the most reasonable and least expensive solution

Disadvantages

- All of these solutions simply "live with" the excessive harmonic currents on the power system; they do not inherently reduce the current or voltage distortion
- May be very expensive if transformers or generators are significantly oversized

Power factor solutions that address harmonics

Today, if you need to correct the power factor on your system, you must consider the interaction of harmonics with power factor correction equipment. As a rule of thumb: if you install capacitors on a system with harmonics, you will always increase the harmonics as a result of resonance. The increase of harmonic voltage and/or current depends on the power system and how close the resonance points are to the harmonics produced by the loads as well as the amount of harmonic current that is produced by the loads. An example of the initiation of harmonic resonance is illustrated in **Figure 38**. This would occur when a PF capacitor is switched on or when a harmonic load produces current amplified by an existing capacitor. The larger the capacitor, the lower the parallel harmonic resonant point on the power system as shown in **Figure 39. Figure 40** shows a capacitor that was damaged by harmonic resonance.

PF correction equipment is generally applied to a power system for one of three reasons:

- Improve power factor to avoid utility penalties
- Increase system capacity especially in transformers or cables (by reducing total kVA and amperes)
- Improve kW efficiency—i.e., reduce total load current resulting in reduction of I^2R losses

When harmonics exist on a power system with capacitors, harmonic resonance may damage the capacitors or other components in the power system.

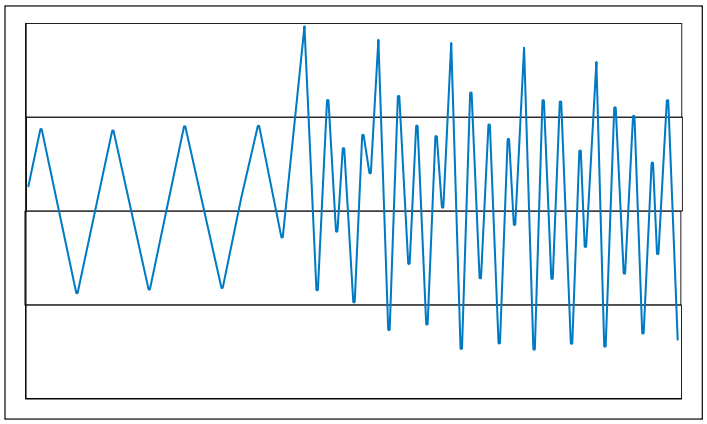

Figure 38. Initiation of harmonic resonance

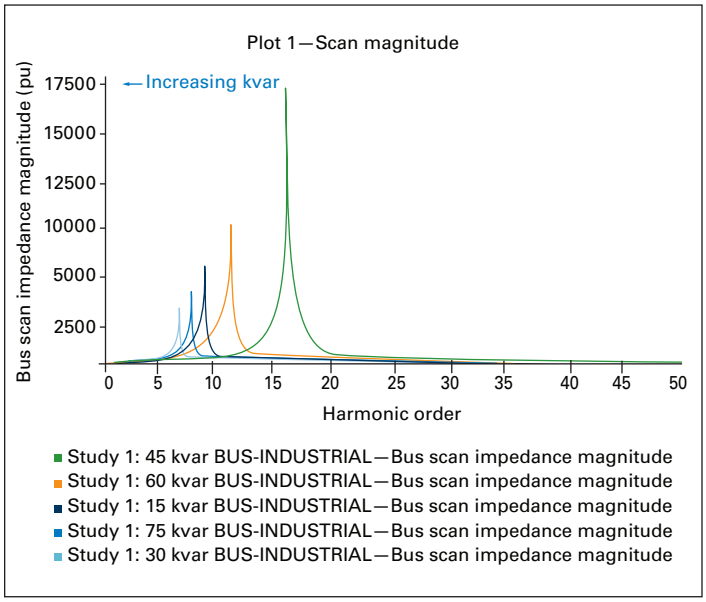

Figure 39. Harmonic resonance orders associated with various capacitor sizes



Figure 40. Capacitor damage caused by harmonic resonance

Sometimes, if you are trying to improve the power factor, the result may be harmonic resonance (a negative result). Sometimes, if you are trying to reduce the harmonics flowing in the power system, you may actually improve the power factor (a positive result).

Care must be taken to understand the complex relationship between capacitors and harmonics.

If you are concerned with harmonics and resonance, consider fixed or switched tuned or detuned harmonic filters rather than installing fixed or switched capacitors. Tuned filters will correct the power factor and attract more harmonics and detuned filters will provide PF correction without attracting significant harmonics, protecting the filter from overloads and controlling harmonic resonance.

Avoiding harmonic resonance

At the fundamental frequency (60 Hz, for example), a harmonic filter that is made up of a capacitor and inductor in series looks like a PF correction capacitor and the reactor only comes into play when the frequency is increased (i.e., to attract harmonic currents).

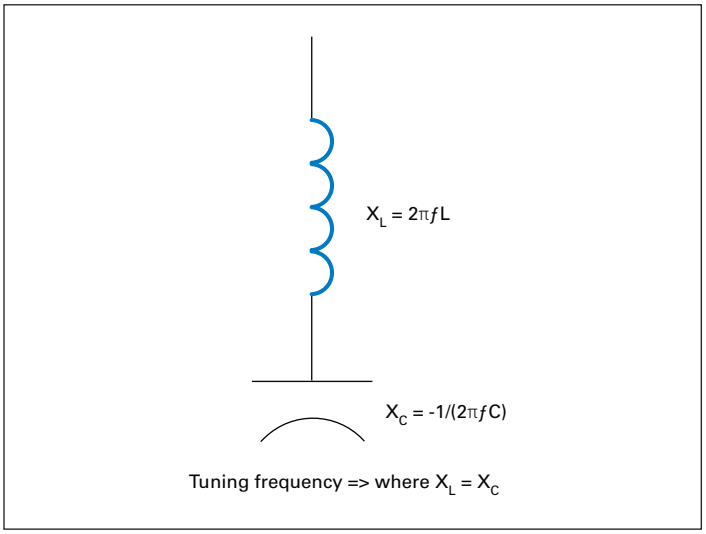

Figure 41. Harmonic filter components

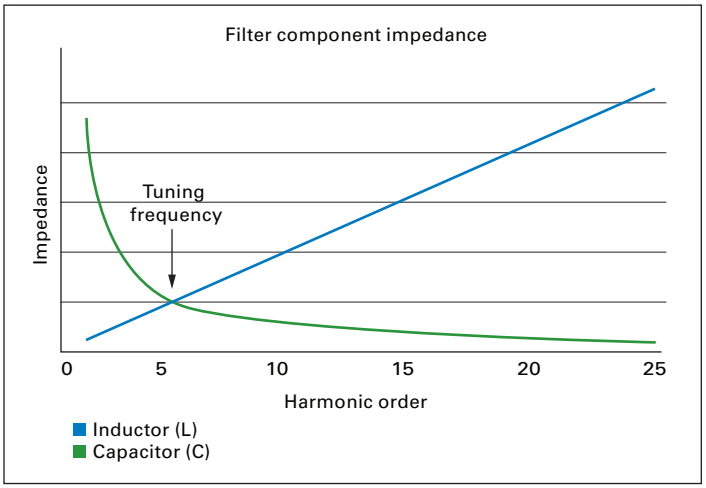

Figure 42. Harmonic filter component frequency scan (tuning point where Xl=Xc)

To correct the PF and avoid resonance, two options are available:

1. Apply another method of kvar compensation to correct the power factor. Other harmonic solutions that will compensate for the fundamental (50 Hz or 60 Hz) reactive current include harmonic filters, active filters, and series broadband drive filters. Note that most drives today use a diode rectifier circuit on the front end and thus have a relatively high power factor. Drives with other harmonic mitigating solutions (reactors, 18 pulse, phase shifting, etc.) tend to improve the power factor without the need for capacitors. In addition, synchronous condensers can provide power factor correction and avoid harmonic resonance.
2. Change the size of the capacitor bank to overcompensate or undercompensate for the required kvar and live with the ramifications. Care must be taken to ensure that this method does not cause other problems especially overvoltage issues if overcompensation is done.

The correct choice to avoid resonance depends on the situation. If a harmonic solution could relieve the power factor penalty and reduce the overall system harmonics, this may be your best choice. Otherwise, simply changing the size of the capacitor is typically the least expensive solution. Ensure that the overvoltage resulting from overcompensation or the power factor penalty resulting from undercompensation are acceptable.

Low-voltage versus medium-voltage solutions

One important factor for applying capacitors or harmonic solutions for correcting power factor is whether the solution should be applied at the low-voltage (LV) or medium-voltage (MV) level. If the power factor penalty is the only concern, an MV solution is typically the most economical choice for larger banks (typically >1500 kVA). In addition, harmonic resonance is often easier to avoid at the MV level using capacitors alone without a harmonic filter reactor. However, for multistage banks, MV switching adds significant cost and therefore, the banks at MV typically have larger switched or fixed stages.

If improving system capacity or improving kW efficiency are significant concerns, then applying LV solutions closer to the loads is the most appropriate choice. For smaller kvar requirements, LV banks are almost always the most economical solution.

How can reducing harmonics save you money?

Correcting a harmonic problem can save money in obvious ways if the problem resulted in physical damage to equipment or misoperation of equipment. Alleviating these issues shows an immediate payback if the ongoing damage or the cost associated with the misoperation is more substantial than the cost of the solution. **Figure 43** shows an example of a transformer that is severely overheating because of harmonics.

Other subtle, but sometimes significant, issues arise as a result of harmonic currents flowing throughout the power system and distorting the voltage. These issues primarily relate to the costs associated with the reduced efficiency of power system equipment operating at frequencies other than the 50 Hz or 60 Hz for which they were designed.

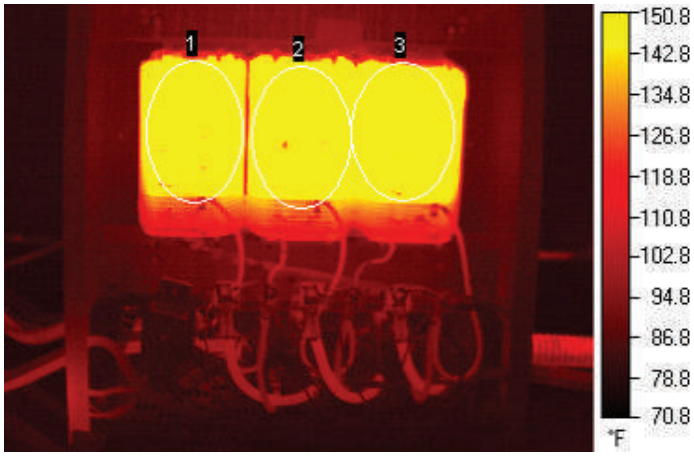

Figure 43. Thermal scan of transformer under significant harmonic load

The following are some ways that harmonics can cost you money without you realizing it.

1. Transformers, motors, generators, cables, and UPS systems are often over-designed when harmonics are present and the cost associated with this over-design can be significant. Consider the following example. If you install a generator that is two times the required kW size based on the load, you will pay substantially more for the generator and all of its associated systems, not to mention the cost of the physical space required.
2. Like power factor correction, the kW losses in cables, transformers, and generators may be appreciable if a significant amount of harmonic current is allowed to flow on a power system. Still, these I^2R losses are usually on the order of 1–4% maximum and, like PF correction, may not be enough to have a reasonable return on investment alone without other benefits but is still worth considering over the life of the equipment. **Figure 44** shows actual measured losses associated with transformers comparing a linear load to a 100% harmonic distortion load (computer power supplies). As you can see, the losses are about 1% different so even if you could completely eliminate all of the harmonics in this situation, you would only realistically save 1% of the total power. This may not have a quick return on investment but given that equipment typically has a 20-year life, the financial losses are considerable over time.

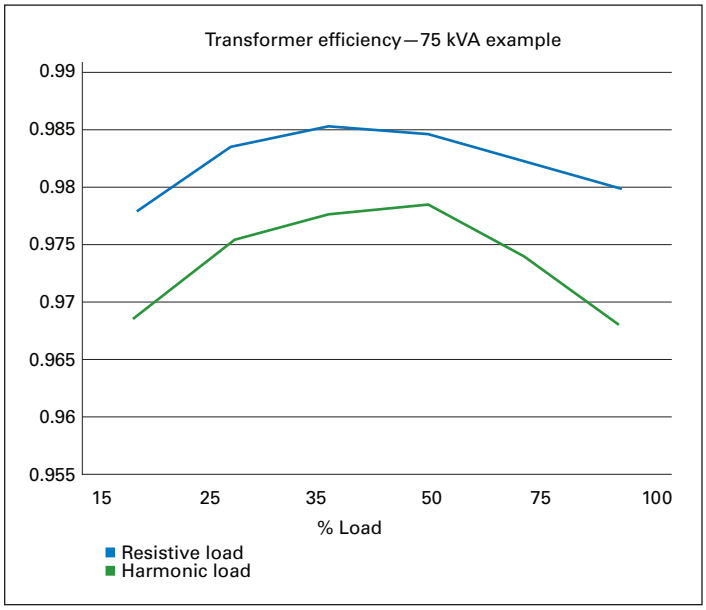

Figure 44. Transformer losses with harmonic load versus linear (resistive) load

3. Systems with high 3rd harmonic currents may have slightly more savings, on the order of 3–8% for extreme cases. Because most of the loads that create the 3rd harmonics are being replaced with low distortion options, like power factor corrected power supplies, these concerns are less today than they have been in the past.
4. If the system voltage becomes distorted as a result of significant harmonic loads, and an appreciable amount of "negative sequence" voltage is present (5th harmonic, for example), motors fed directly from the bus with voltage distortion will draw a 5th harmonic current. This current produces a reverse and pulsating torque, as shown in **Figure 45**, opposing the motor's preferred direction that the motor must overcome to do its required work. Constantly fighting this reverse torque makes the motor hot and very inefficient. Premature motor failures and losses will result. In this case, the voltage distortion should be corrected but it may not be immediately evident that a problem even exists. Savings may be on the order of 2–4%.



Figure 45. 5th harmonic (negative sequence; yellow arrow) resists forward motion of 60 Hz current (red arrow)

5. High harmonic currents will result in lower power factor measurements. Depending upon the method of calculation that the utility uses, the total power factor, TPF, (including harmonics) or displacement power factor, DPF, (fundamental voltage and current only) can result in a power factor charge on your bill. **Figure 46** shows the difference in kVA on a 3-dimensional plot including harmonics. In the figure, kVA_D is the total apparent power at 60 Hz only and kVA_T is the total kVA including harmonics (H), which adds a third dimension to the power triangle. Because power factor is calculated by dividing the kW by kVA, DPF (60 Hz only) is always higher than TPF if harmonics are present.

   Note that most utility rate structures that impose power factor penalties base the power factor measurement on the displacement, or 60 Hz power factor (DPF). Harmonics will not cost you more money if the utility rate structure is based on DPF. However, having harmonics and a low TPF means that your kW per kVA is lower than it would be without harmonics. Harmonics increase total kVA and thus, current (amps), in transformers and cabling, resulting in additional I^2R losses.

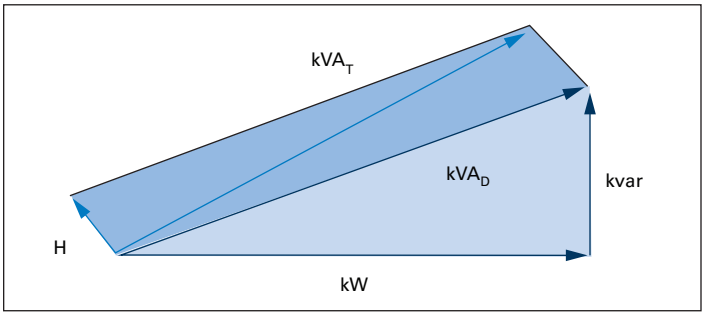

Figure 46. 3-D power triangle including harmonic distortion

Single load versus systems approach for harmonic solutions

The decision to apply one harmonic solution over another is typically an economic one but is also highly dependent upon the effectiveness of the solution. **Table 6** shows the "general" effectiveness of various harmonic solutions. For each solution, the resulting typical ITHD is shown. For example, a line reactor is certainly much less expensive than an active filter but a typical line reactor will only reduce the current harmonics to approximately 35% while an active filter will reduce the current distortion to less than 5%. The active filter will ensure that harmonic problems will most likely be eliminated while correcting the power factor if needed.

Figure 47 and **Figure 48** demonstrate the cost of various harmonic solutions for VFDs for a single load versus a systems approach, but these figures do not include cost of the drive. **Figure 49** includes the cost of the drive and a fair comparison can be made between solutions. For solutions that are similar in cost, the deciding factor can then be the effectiveness of the solutions for harmonic correction.

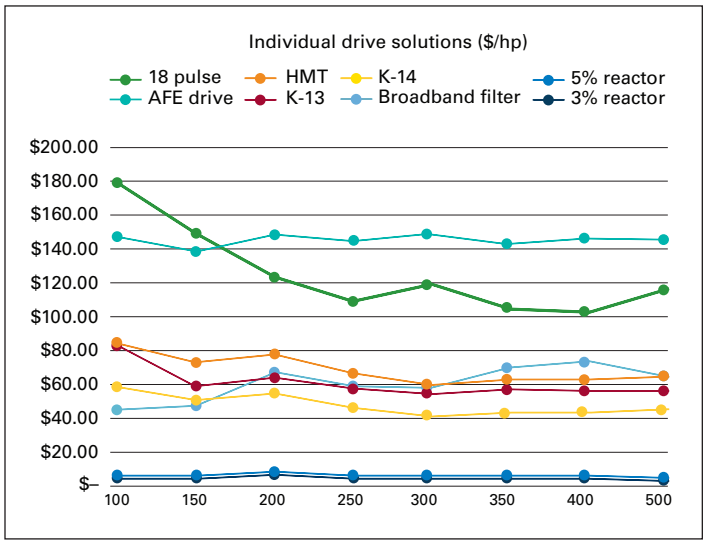

Figure 47. Individual harmonic solution comparison (without cost of drive)

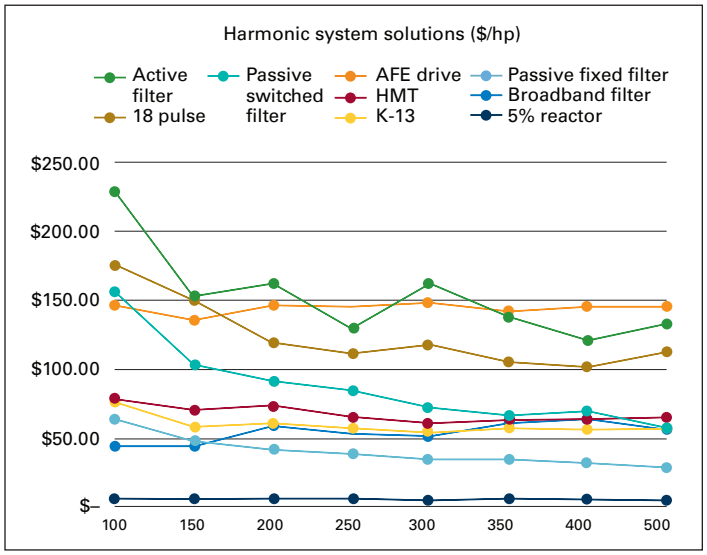

Figure 48. System approach for harmonic solutions (without cost of drive)

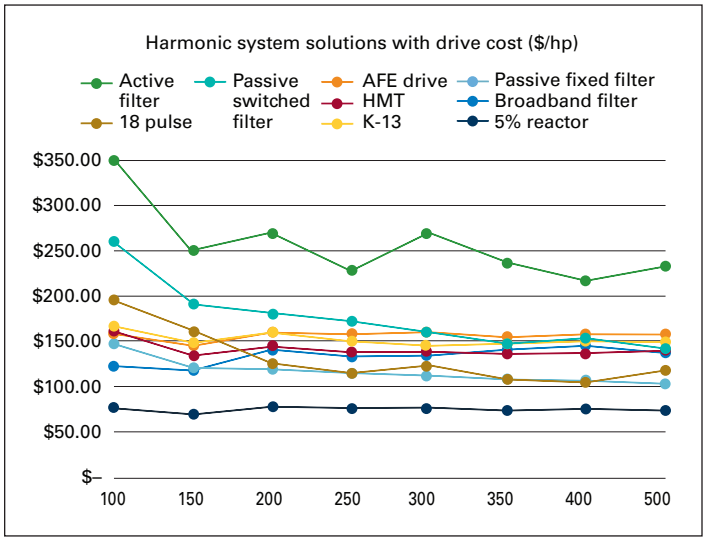

Figure 49. System approach for harmonic solutions (with cost of drive)

Summary

Table 6 and **Table 7** summarize the harmonic solutions discussed in this paper. **Table 6** defines the solutions with reference to harmonic correction equipment types. **Table 7** describes the solutions with reference to load types. The tables indicate the most significant advantages and disadvantages of each technology. Details of other advantages and disadvantages for each solution are shown in the main body of this paper.

The decision for applying harmonic solutions at low voltage or medium voltage and whether that solution should be applied to an individual load or as a "system" solution is dependent on the economics of the situation as well as the effectiveness of the solution(s). When it comes to medium-voltage applications, familiarity and safety must be taken into account.

Each solution has merit given different circumstances. Selecting the right solution requires experience with each type of technology to ensure that it is the best technical and economic solution for the application.

Table 6. Comparison of harmonic solution options by corrective equipment

Solution type	Effectiveness (remaining THD)	Significant advantages	Significant disadvantages
Individual load solutions			
AC line reactors	I^{THD} <35%	• Inexpensive • 6-pulse standard drive/rectifier, reduce harmonic current distortion from 80% down to about 35–40%	• May require additional compensation
DC choke for drives	I^{THD} <35%	• Slightly better than AC line reactors for 5th and 7th harmonics	• Not always an option for drives • Less protection for input semiconductors
Isolation transformers	I^{THD} <35%	• Offers series reactance (like reactors) and provides electrical isolation for some transient protection	• No advantage over reactors for reducing harmonics unless used in pairs for phase shifting
Drive dedicated (broadband) blocking filters	I^{THD} <8% or 12%—depending on type	• Makes 6-pulse into 18-pulse equivalent at reasonable cost	• Higher cost • Requires one filter per drive
12-pulse drives	I^{THD} <15%	• Reasonable cost for substantial reduction in voltage and current harmonics	• Impedance matching of phase-shifting sources is critical to performance
18-pulse drives	I^{THD} <5%	• Excellent harmonic control for larger drives (>100 hp) • Ensures IEEE Std 519-2014 compliance	• Higher cost
24-pulse drives (MV)	I^{THD} <3%	• Excellent cost benefit for large drives (>1000 hp) • Ensures IEEE Std 519-2014 compliance	• Higher cost • Requires special safety knowledge for MV systems
Active front end drives	I^{THD} <3%	• Ensures IEEE Std 519-2014 compliance • Can be used on regenerative loads	• Higher cost • Increased physical size for drives
Active front end UPS	I^{THD} <3%	• Ensures IEEE Std 519-2014 compliance • Can be used as bidirectional inverter for utility demand response programs	• Can have leading PF at light loads • No magnetic decoupling of input/output
Low distortion loads (lighting, computers, etc.)	I^{THD} depends on load type	• Can purchase loads specified to have a predetermined harmonic level	• Generally higher cost—especially for redundant loads
System solutions			
Passive harmonic filters	I^{THD} <15%	• Reduces most prevalent harmonics (typically 5th) to acceptable level • Provides PF correction support • Avoids resonance by selecting "tuned" frequency	• Typically requires system knowledge and application study/analysis
Parallel active harmonic filters	I^{THD} <5%	• Excellent cancellation for 2nd through 50th harmonic currents • Cannot be overloaded • Easy to specify	• Typically, highest cost
Series active harmonic filters	V^{THD} <15%	• Excellent power conditioning for removing source voltage harmonics	• Typically, highest cost • Does not reduce current harmonics
Neutral blocking filters	3rd harmonic is reduced to <10%	• Eliminates the 3rd harmonic current from load • Relieves system capacity	• High cost • May increase voltage distortion at loads
Harmonic mitigating transformers	I^{THD} <10% possible with transformer combinations	• Substantial (50–80%) reduction in harmonics when used in combinations of 2 or more • Not prone to resonance issue (like harmonic filters and capacitors) • Good for new construction	• Harmonic cancellation dependent on load balance • More difficult to justify cost as a retrofit solution
Transformer derating	N/A	• Typically, most reasonable (cost) solution	• Does not remove harmonics • Reduces capacity of power systems
K-factor transformers	N/A	• Offers series reactance (like line reactors) and provides electrical isolation for some transient protection	• No advantage over reactors for reducing harmonics unless used in pairs for phase shifting
Oversized neutrals	N/A	• "Live-with" high 3rd harmonics	• All downstream panels and shared neutrals must be oversized • Transformer windings and neutral must be sized for high harmonics
Power factor solutions			
Passive filters	I^{THD} <15%	• Avoids resonance versus standard capacitors	• Must be designed specific to system and loads
Active filters	I^{THD} <5%	• Can select harmonic correction, PF correction, or both • Easy to specify	• Highest cost
AFE drives and UPS	I^{THD} <3%	• Can design loads to have unity PF	• High cost

Table 7. Comparison of harmonic solution options by load type

Optional solutions	Significant advantages	Significant disadvantages
Drives, large rectifiers, UPS (three-phase loads)		
AC line reactors	• Inexpensive • For 6-pulse standard drive/rectifier, can reduce harmonic current distortion from 80% down to about 35–40%	• May require additional compensation
DC chokes	• Slightly better than AC line reactors for 5th and 7th harmonics	• Not always an option for drives • Less protection for input semiconductors
K-rated/drive isolation transformers	• Offers series reactance (like line reactors) and provides electrical isolation for some transient protection	• No advantage over reactors for reducing harmonics unless used in pairs for phase shifting
12-pulse converters	• 85% reduction versus standard 6-pulse	• Often not substantially less cost than 18-pulse or blocking filter
Harmonic mitigating transformers/phase shifting	• Substantial (50–80%) reduction in harmonics when used in combinations of two or more • Not prone to resonance issue (like harmonic filters and capacitors) • Good for new construction	• Harmonic cancellation dependent on load balance • More difficult to justify cost as a retrofit solution
Tuned filters	• Bus connected—accommodates load diversity • Provides PF correction	• Requires application analysis
Broadband series filters	• Makes 6-pulse into 18-pulse equivalent at reasonable cost	• Higher cost • Requires one filter per drive even for systems with redundant drives
18-pulse converters	• Excellent harmonic control for larger drives (>100 hp) • Ensures IEEE Std 519-2014 compliance	• Higher cost
24-pulse drives (MV)	• Most appropriate for larger medium-voltage (MV) systems >300 hp	• High cost • May increase voltage distortion
Active filters	• Best and most complete solution up to 50th harmonic • Can take advantage of load diversity	• Typically highest cost
Computer power supplies, fluorescent lighting, LED lighting (single-phase loads)		
Neutral blocking filters	• Only solution that eliminates the 3rd harmonic current from load • Relieves system capacity and has potential for energy savings	• Typically requires system knowledge and application study/analysis
Harmonic mitigating transformers	• "Handles" 3rd harmonics recirculating them back to the load • Can reduce other (5th and 7th) harmonics when used as phase-shifting pairs • Reduces voltage "flat-topping"	• Requires fully rated circuits (and oversized neutrals) downstream to loads
Oversized neutral/derated transformers	• "Live-with" harmonics—typically, least expensive	• Upstream and downstream equipment fully rated for harmonics
K-rated transformers	• "Live-with" harmonics	• Does not reduce "system" harmonics
Low distortion loads	• Reduce the source during purchase for new equipment	• Additional cost and typically more expensive than "system" solution
Welding/arcing loads		
Active filters	• Fast response and broad-band harmonic correction • Reduces voltage flicker	• Typically highest cost
Tuned filters	• SCR controlled tuned filters can simulate active filter response (harmonics are typical of 6-pulse drive)	• SCR controlled units are high cost but fixed filters are reasonable—depends on load diversity for multiple welders
Aggregate loads (system solutions)		
Tuned filters	• Typically lowest cost compared to other system solutions • Provides PF correction	• Need system analysis to verify application
Harmonic mitigating transformers/phase shifting	• Excellent choice for new design or upgrade	• No PF correction benefit
Active filters	• Ideal solution and can take advantage of diversity of loads	• Typically, highest cost

Notes: Only 18-pulse and AFE include cost of drive—series filter, line reactors and other solutions do NOT include cost of drive.

Costs for rough technology comparison only. Drive cost for typical 6-pulse based on typical consumer pricing per drive size.

Reactors, K-rated transformers, HMT, broadband filter, 18-pulse, AFE are all fully rated for load size with no diversity factor. Fixed passive parallel, switched passive filter and active filter are all applied at a reduced "system" size of approximately one-half of the load kVA and at a diversity level to match the system loading.

References

1. IEEE Std 519-2014—IEEE Recommended Practice and Requirements for Harmonic Control in Electric Power Systems.
2. IEEE Standard 519-1992—IEEE Recommended Practices and Requirements for Harmonic Control in Electrical Power Systems.
3. D. J. Carnovale, "Applying Harmonic Solutions to Commercial and Industrial Power Systems." Globalcon, 2003, Boston, MA.
4. IEEE Standard 1100-2005—IEEE Recommended Practice for Powering and Grounding Electronic Equipment (Emerald Book).
5. D. J. Carnovale, "Power Factor Correction and Harmonic Resonance: A Volatile Mix," EC&M Magazine, June 2003.
6. T. Key and J. Lai, "Cost and Benefit of Harmonic Current Reduction for Switch-Mode Power Supplies in a Commercial Office Building," in IEEE Transactions on Industry Applications, Vol. 32, No 5, September/October 1996.
7. J. K. Piel and D. J. Carnovale, "Economic and Electrical Benefits of Harmonic Reduction Methods in Commercial Facilities." EPRI PQA 2003, Monterey, CA.

We make what matters work.*

* At Eaton, we believe that power is a fundamental part of just about everything people do. Technology, transportation, energy and infrastructure—these are things the world relies on every day. That's why Eaton is dedicated to helping our customers find new ways to manage electrical, hydraulic and mechanical power more efficiently, safely and sustainably. To improve people's lives, the communities where we live and work, and the planet our future generations depend upon. Because that's what really matters. And we're here to make sure it works.

See more at Eaton.com/whatmatters

Eaton
1000 Eaton Boulevard
Cleveland, OH 44122
United States
Eaton.com

© 2021 Eaton
All Rights Reserved
Printed in USA
Publication No. WP040009EN / Z25328
July 2021

Eaton is a registered trademark.

All other trademarks are property of their respective owners.

Follow us on social media to get the latest product and support information.

Powering Business Worldwide